# HHA Series Air Handler
## Installation, Operation and Maintenance Manual

**Magic Aire HHA Series units are direct drive High Static Horizontal Air Handlers delivering nominal airflows of 300 to 2500cfm and nominal cooling capacities of 1/2 to 6 tons.** Units may be specified with chilled water or DX cooling coils and hot water or steam heating coils to meet space cooling loads or heating loads or both.

**How to Use this Manual:**
This manual gives instructions regarding installation, operation and maintenance for the HHA Series air handling units. For more information refer to:

**Catalog brochure** for unit dimensions, options, guide specifications and performance information.
**New Magic 4** software for faster selection of new equipment.
**Website** www.magicaire.com for replacement parts guide, software downloads, product data and contact info for your local Magic Aire representative.
**Replacement Parts –** Identify parts needed using the replacement parts guide available at **www.magicaire.com.**

Use these instructions in conjunction with other appropriate instructions, including but not limited to those instructions supplied with the outdoor unit (if applicable). Installation must comply with all applicable local codes.

## SAFETY WARNING:
Installer should pay particular attention to the following words:
**NOTE**–intended to clarify or make installation easier.
**CAUTION**–given to prevent equipment damage.
**WARNING**–to alert installer that personal injury and/or equipment damage may result if installation procedure is not properly followed.

**DANGER**

**VFD Energy Stored!**
Dangerous voltage is present when input power is connected. After disconnecting power supply wait at least 5 minutes before performing any maintenance.

**GENERAL**
Installation and maintenance are to be performed **only** by qualified personnel who are familiar with local codes and regulations and are experienced with HVAC equipment of this type.

**WARNING: Sharp edges, coil surfaces and rotating fans are a potential injury hazard – avoid contact.**

**WARNING: Hazardous voltage – Disconnect and Lock Out all incoming power sources before servicing or installing unit. ELECTRIC SHOCK CAN CAUSE DEATH.**

**WARNING: This equipment may be installed well above finished floor—Use extreme caution when working at heights.**

**UNPACKING-CHECK FOR DAMAGE!**

**Immediately inspect each unit for damage upon receipt.**

- Inspect units for external and concealed damage immediately.
- File any damage claims in accordance with Magic Aire Freight Damage Policy and Terms and Conditions (available at www.magicaire.com).
- Do not repair damaged units without written authorization.
- Protect stored units from damage.

THIS PAGE INTENTIONALLY LEFT BLANK

# Installation, Start-Up and Service Instructions

## DANGER

NEVER enter an enclosed fan cabinet or reach into a unit while the fan is running.
LOCK OPEN AND TAG the fan motor power disconnect switch before working on a fan. Take fuses with you and note removal on tag. Electric shock can cause personal injury or death.
LOCK OPEN AND TAG the electric heat coil power disconnect switch before working on or near heaters.
Failure to follow these warnings could lead to personal injury or death.

## WARNING

CHECK the assembly and component weights to be sure that the rigging equipment can handle them safely.
Note also, the centers of gravity and any specific rigging instructions.
CHECK for adequate ventilation so that fumes will not migrate through ductwork to occupied spaces when welding or cutting inside air-handling unit cabinet or plenum.
WHEN STEAM CLEANING COILS be sure that the area is clear of personnel.
DO NOT attempt to handle access covers and removable panels on outdoor units when winds are strong or gusting until you have sufficient help to control them. Make sure panels are properly secured while repairs are being made to a unit.
DO NOT remove access panel fasteners or open access doors until fan is completely stopped. Pressure developed by a moving fan can cause excessive force against the panel which can injure personnel.
DO NOT work on dampers until their operators are disconnected.
BE SURE that fans are properly grounded before working on them.
Failure to follow these warnings could result in personal injury or equipment damage.


## UNPACKING-CAUTION!

After removing the outer packaging,

**REMOVE RED BRACKET SCREWS**

from the shipping pallet brackets as shown in Figure 1a. Remove shipping brackets. REINSTALL the bracket screws into the unit side (Figure 1b).

**REMOVE RED BLOWER SHIPPING SCREWS**

from the blower supports as indicated in Figure 2. These screws stabilize the fan assembly during shipping and need to be removed.

**CAUTION!** Not removing red shipping screws can result in unsatisfactory vibration or blower noise.

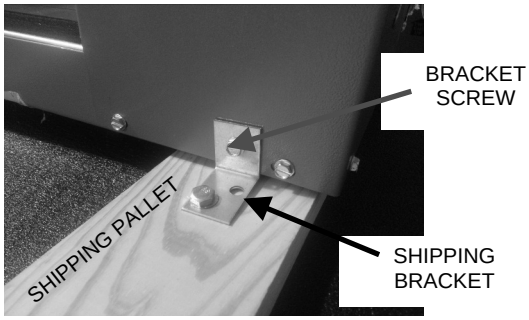


**Figure 1a**

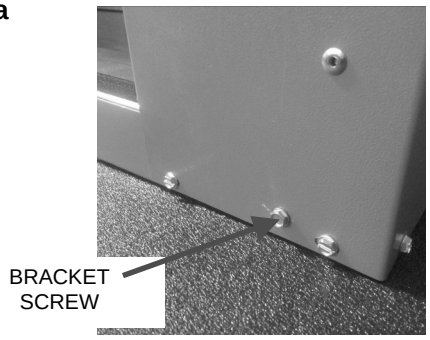


**Figure 1b**

**Figure 1a,b**
**Remove Shipping Brackets and Reinstall Bracket Screws (multiple locations)**

**Figure 2**
**Remove Red Shipping Screws–Blower (1ea per side, 2ea total)**

## PREINSTALLATION

1. Check items received against packing list.
2. Do not stack unit components or accessories during storage. Stacking can cause damage or deformation.
3. If unit is to be stored for more than 2 weeks prior to installation, observe the following precautions:
   a. Choose a dry storage site that is reasonably level and sturdy to prevent undue stress or permanent damage to the unit structure or components. Do not store unit on vibrating surface. Damage to stationary bearings can occur. Set unit off ground if in heavy rain area.
   b. Remove all fasteners and other small parts from jobsite to minimize theft. Tag and store parts in a safe place until needed.
   c. Cover entire unit with a tarp or plastic coverall. Extend cover under unit if stored on ground. Secure cover with adequate tie-downs or store indoors. Be sure all coil connections have protective shipping caps.
   d. Monthly — Remove tarp from unit, enter fan section through access door or through fan inlet, and rotate fan and motor slowly by hand to redistribute the bearing grease and to prevent bearing corrosion.

**Rigging —** Do not remove shipping skids or protective covering until unit is ready for final placement. Use slings and spreader bars as applicable to lift unit. *Do not lift unit by coil connections or headers.*

Do not remove protective caps from coil piping connections until ready to connect piping.
Do not remove protective cover or grease from fan shaft until ready to install sheave.
Lay rigid temporary protection such as plywood walkways in unit to prevent damage to insulation or bottom panel during installation.

**WARNING-AUXILIARY DRAIN PAN RECOMMMENDED:**

This product has an auxiliary condensate drain which should be piped to a condensate overflow sensor or safe drain location or both to protect the equipment and property from damage in the case of condensate overflow.

In addition, the International Mechanical Code (IMC) section 307.2.3 requires the use of auxiliary drain pans. Many municipalities have adopted this code.

Magic Aire holds that this practice represents the standard for professional installation whether or not this code has been adopted in a specific municipality or territory. As such, water damages that would have been prevented had an auxiliary pan been deployed will not be considered for compensation. This position is taken regardless of whether the source of the moisture was specified as a potential failure mode in the applicable building code or not. A freeze burst, cracked drain pan, failed weld, or corrosion induced leak are some of the potential failure modes that are mitigated when an auxiliary pan is properly installed. Professional installers recognize the value of protecting customer assets against foreseeable events. Customers who choose to avoid the cost of common protective measures waive their right to seek damages when those foreseeable events occur. If the product is located above a living space or where damage may result from condensate overflow, install a watertight pan of corrosion-resistant metal beneath the unit to catch over-flow which may result from clogged drains or from other reasons. Provide proper drain piping for this auxiliary pan. Consult local codes for additional precautions before installation.

### UNIT WEIGHT CALCULATION

**Table 1 — Unit Dry Weight**

| Unit Weights | | |
|---|---|---|
| **Size** | **Cabinet** | **Dry Weight (lbs)** |
| 04/06 | B | 503 |
| 04/06 | D | 772 |
| 08/12 | B | 516 |
| 08/12 | D | 785 |
| 16/20/25 | B | 880 |
| 16/20/25 | D | 1085 |

**Calculation Procedure:**

1. Calculate coil water weight for each water coil using the following formula:

   Water Weight =
   Coil Volume (gal) x 8.345lb/gal
   (volume is from Physical Data table)

2. Calculate total weight:

   Total Unit Installed Weight =
   Unit Dry Weight + Water Weight (coil 1)
   + Water Weight (coil 2)

## UNIT SUSPENSION

Ceiling Suspension: Acceptable forms of unit suspension are shown in Fig. 3, 4 and 5. A field-supplied platform mount is recommended, especially for larger unit sizes. Units can also be supported by suspending the unit from lengthwise (direction of airflow) beams. Size suspension rods to support the weight. Size any beam members to insure that they are adequate for a safe installation. Ensure that suspension rods are secured to adequately support the unit and that the rods extend entirely through their associated fasteners.
It is recommended that framing be constructed from structural steel or formed-strut materials.

**WARNING! INSURE THAT UNIT IS ADEQUATELY SUPPORTED FROM STRUCTURE TO PREVENT DAMAGE OR INJURY CAUSED BY FALLING EQUIPMENT! If uncertain about how to connect to the structure, consult a qualified structural engineer.**

Floor mounting: Unit may be mounted on a housekeeping pad, floor or platform. **CAUTION! Make sure to allow enough elevation to permit construction of the condensate trap.**

**Vibration Isolators:** (field supplied) If required, install isolators in the suspension rod system. Allow clearance as needed between isolators and unit.

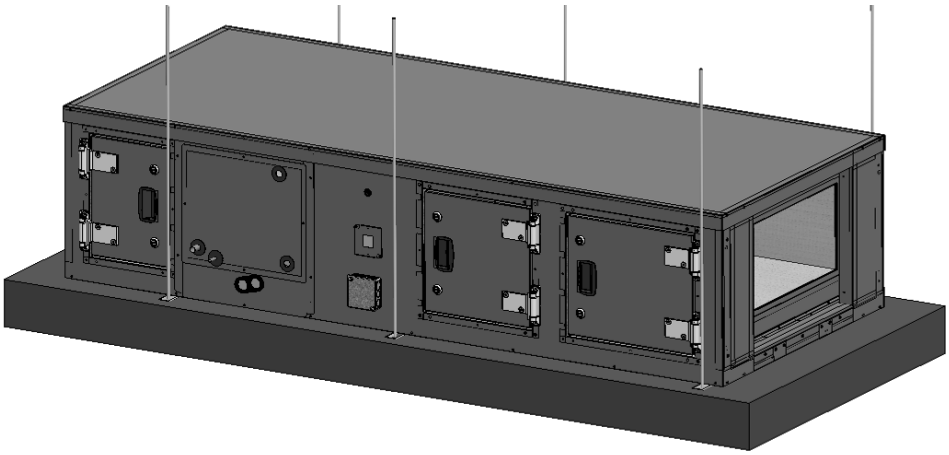

**Fig. 3**
**Ceiling Suspension—**
**Platform Mount**

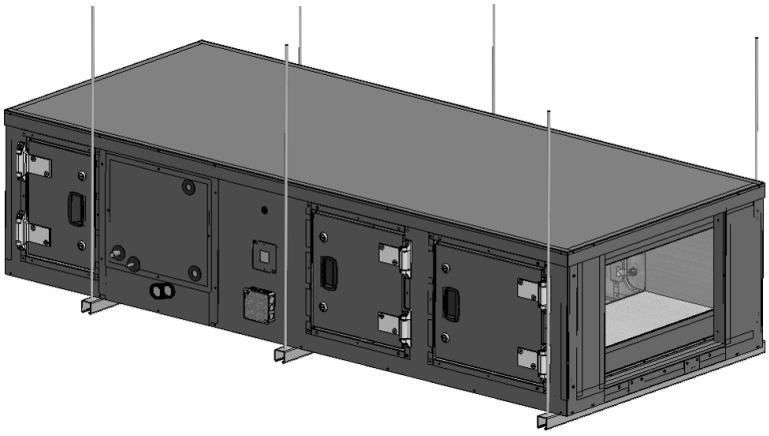

**Fig. 4**
**Ceiling Suspension—**
**Crossbeam Mount**

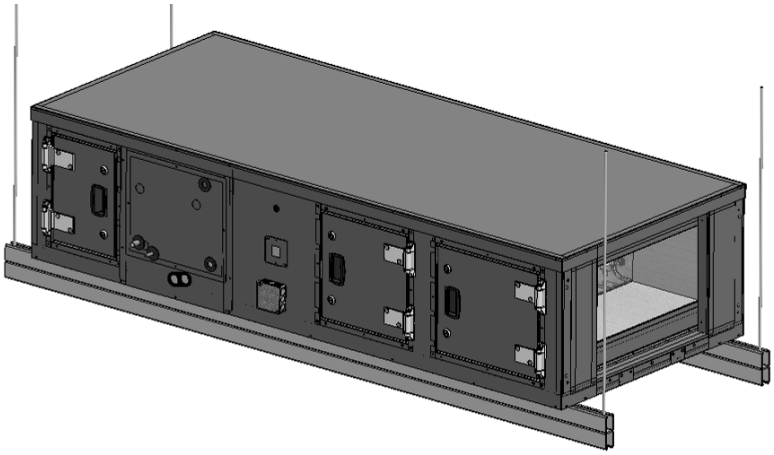

**Fig. 5**
**Ceiling Suspension—**
**Alternate Lengthwise**
**Beam Mount**

## INSTALLATION-ELECTRICAL

**DANGER**

**VFD Energy Stored!**

Dangerous voltage is present when input power is connected. After disconnecting power supply wait at least 5 minutes before performing any maintenance.

**DANGER**

**WARNING: Hazardous voltage.** Only qualified personnel must install the electrical service. Disconnect and Lock Out all incoming power sources before connecting to electrical service.

**WARNING:** This appliance must be permanently grounded in accordance with the National Electrical Code and local code requirements.

**WARNING**: For use with copper conductors only.

**DANGER**

NEVER enter an enclosed fan cabinet or reach into a unit while the fan is running.
LOCK OPEN AND TAG the fan motor power disconnect switch before working on a fan. Take fuses with you and note removal on tag. Electric shock can cause personal injury or death.
LOCK OPEN AND TAG the electric heat coil power disconnect switch before working on or near heaters.
Failure to follow these warnings could lead to personal injury or death.

Typical wiring diagrams are shown on the following pages FOR REFERENCE. Always refer to the wiring diagram on the air handling unit for actual wiring.

Connect electrical service to unit. Refer to unit wiring diagram**. NOTE:** CHECK MOTOR RATING PLATE FOR CORRECT LINE VOLTAGE. For power supply connection, route field power wiring to field-provided and installed disconnect switch and from switch to junction box on unit. Unit is internally wired from junction box to VFD.

Refer to nameplate FLA, maximum overcurrent protection device (MOPD) and minimum circuit ampacity (MCA). Also refer to wiring diagram affixed to unit to make control and power wiring connections.

**NOTE**: Installer is responsible for power wiring and branch circuit over current protection.

## TYPICAL WIRING DIAGRAMS—

Control Option "A", 4-20mA Fan Speed Control

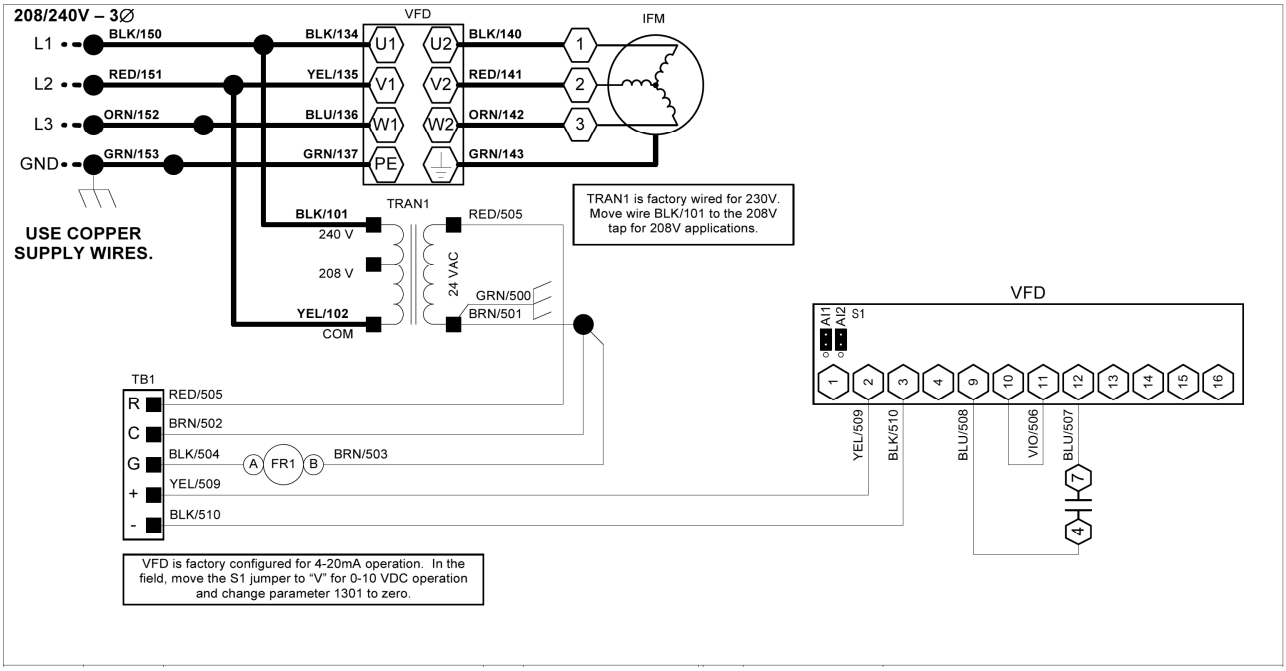


**NOTES:**

1. This diagram represents the factory-installed electrical option with 4-20mA field signal input for fan speed control. Includes VFD keypad mounted on outside of unit.
2. Typical wiring is shown. For exact wiring, refer to the wiring diagram provided with the unit.
3. Field wiring includes power wiring (upper left hand corner) and low voltage control wiring (terminal block TB1).
4. Units ordered for 208V-240V voltage selection are factory wired for 240V. Field may rewire motor and transformer primary tap for operation at 208V.
5. Selection of field provided and installed electrical components is the responsibility of the installer, including branch circuit protection and wiring.
6. To start the fan, connect R and G to energize fan relay FR1. Control fan speed by providing 4-20mA signal at + and - connections at TB1.
7. The control power (R and C at terminal block TB1) can be used to power a standard 24VAC thermostat , DX relay and up to 2ea control valves.

## TYPICAL WIRING DIAGRAMS—

Control Option "B", Manual Fan Speed Control

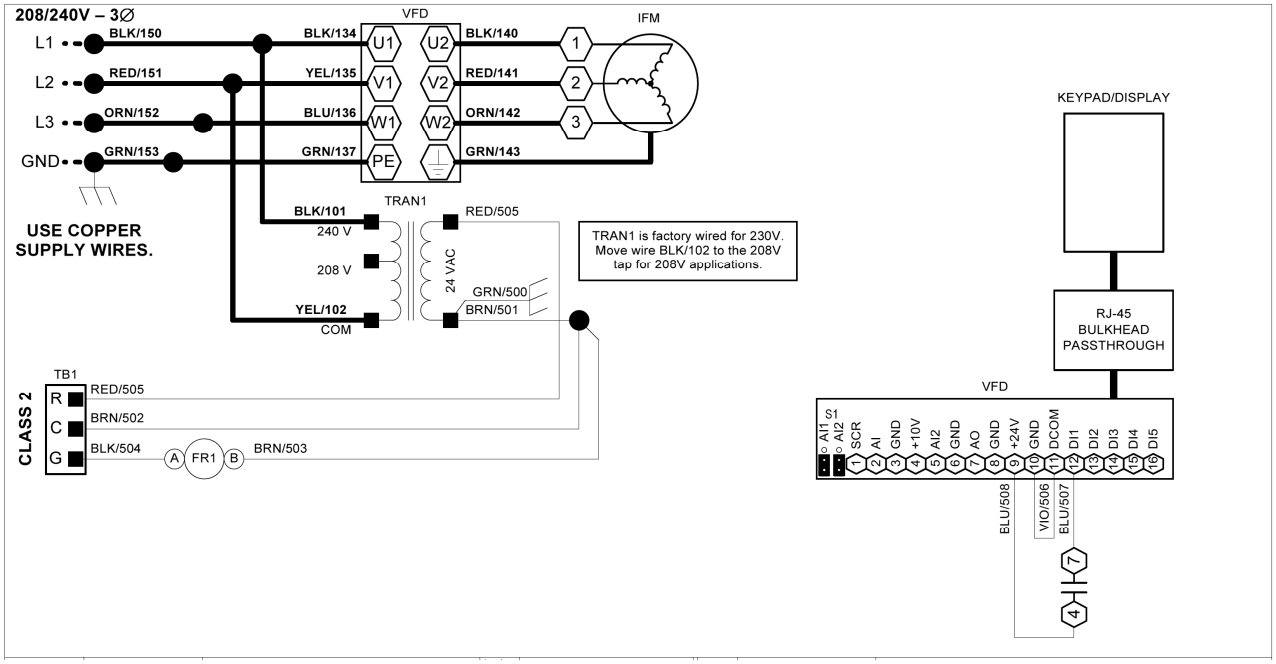


**NOTES:**

1. This diagram represents the factory-installed electrical option with manual fan speed control using the VFD keypad mounted on outside of unit.
2. Typical wiring is shown. For exact wiring, refer to the wiring diagram provided with the unit.
3. Field wiring includes power wiring (upper left hand corner) and low voltage control wiring (terminal block TB1).
4. Units ordered for 208V-240V voltage selection are factory wired for 240V. Field may rewire motor and transformer primary tap for operation at 208V.
5. Selection of field provided and installed electrical components is the responsibility of the installer, including branch circuit protection and wiring.
6. To start the fan, connect R and G to energize fan relay FR1. Control fan speed using the keypad.
7. The control power (R and C at terminal block TB1) can be used to power a standard 24VAC thermostat , DX relay and up to 2ea control valves.

## TYPICAL WIRING DIAGRAMS—
Control Option "D", Constant CFM Control

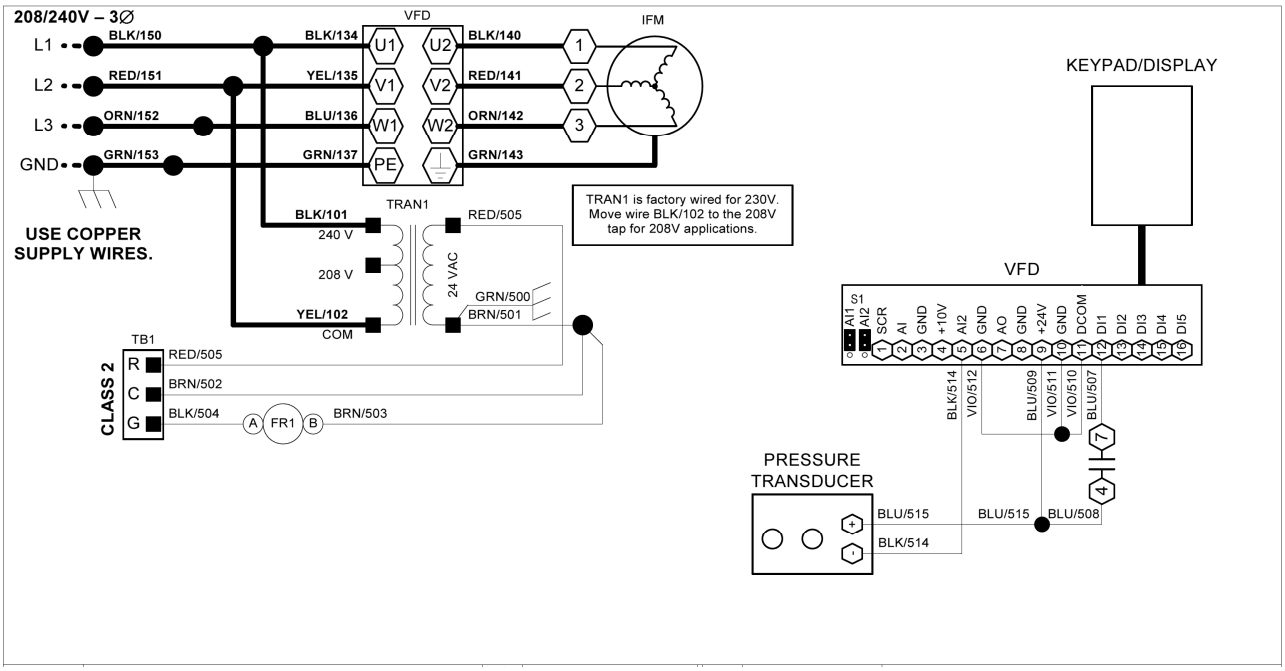


**NOTES:**

1. This diagram represents the factory-installed electrical option with constant CFM control using the pressure transducer mounted inside the unit. Control loop logic is contained in the VFD programming. VFD keypad is mounted on outside of unit.
2. Typical wiring is shown. For exact wiring, refer to the wiring diagram provided with the unit.
3. Field wiring includes power wiring (upper left hand corner) and low voltage control wiring (terminal block TB1).
4. Units ordered for 208V-240V voltage selection are factory wired for 240V. Field may rewire motor and transformer primary tap for operation at 208V.
5. Selection of field provided and installed electrical components is the responsibility of the installer, including branch circuit protection and wiring.
6. To start the fan, connect R and G to energize fan relay FR1. Fan speed is controlled by the VFD using the pressure transducer signal to maintain a fixed airflow (constant pressure difference across the calibrated fan nozzle).
7. The control power (R and C at terminal block TB1) can be used to power a standard 24VAC thermostat , DX relay and up to 2ea control valves.

# Service Clearances Arrangement B (No integral Final Filter)

## HHA SERVICE CLEARANCES

Arrangement B

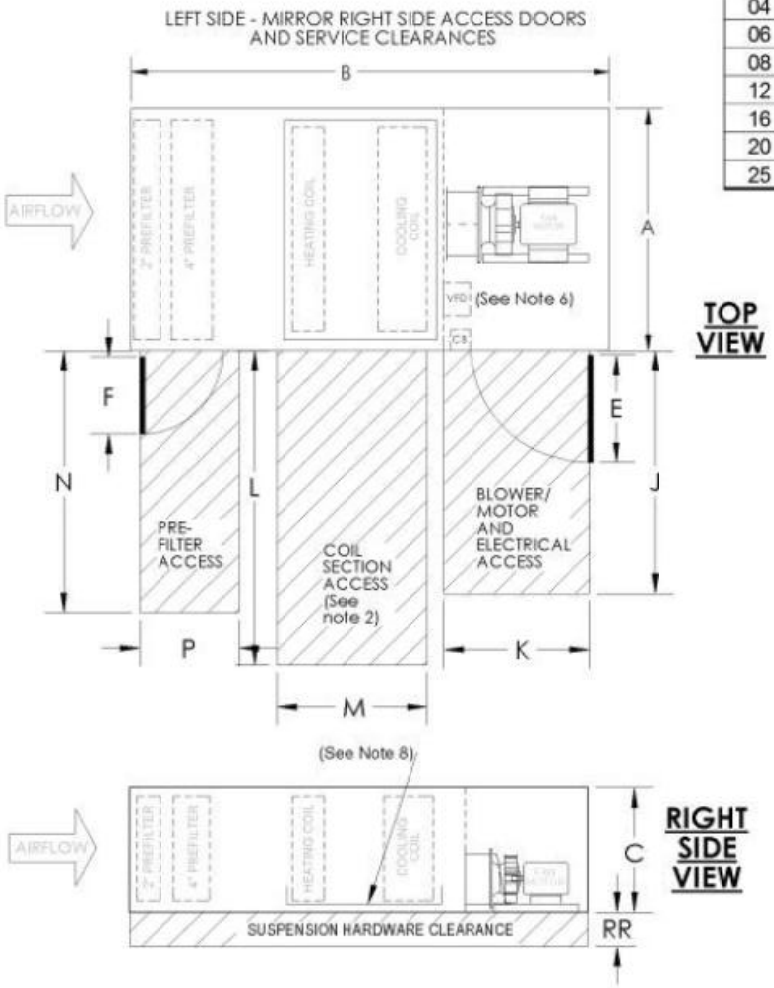


| Service Clearances (inches) | | | | | | | | | | | | |
|---|---|---|---|---|---|---|---|---|---|---|---|---|
| Unit Size | Overall | | | Door Swing | | Blower/ Motor Access | | Coil Section Access | | Prefilter Access | | Sus-pension Clearance |
| | A | B | C | E | F | J | K | L | M | N | P | R |
| 04 | 33.2 | 70.4 | 22.0 | 16.0 | 13.0 | 42.0 | 25.0 | 45.0 | 20.2 | 40.0 | 14.3 | 3.0 |
| 06 | 33.2 | 70.4 | 22.0 | 16.0 | 13.0 | 42.0 | 25.0 | 45.0 | 20.2 | 40.0 | 14.3 | 3.0 |
| 08 | 39.2 | 70.4 | 22.0 | 16.0 | 13.0 | 42.0 | 25.0 | 45.0 | 20.2 | 46.0 | 14.3 | 3.0 |
| 12 | 39.2 | 70.4 | 22.0 | 16.0 | 13.0 | 42.0 | 25.0 | 45.0 | 20.2 | 46.0 | 14.3 | 3.0 |
| 16 | 48.2 | 74.4 | 28.0 | 20.0 | 13.0 | 48.0 | 32.0 | 62.0 | 24.0 | 54.0 | 15.6 | 4.0 |
| 20 | 48.2 | 74.4 | 28.0 | 20.0 | 13.0 | 48.0 | 32.0 | 62.0 | 24.0 | 54.0 | 15.6 | 4.0 |
| 25 | 48.2 | 74.4 | 28.0 | 20.0 | 13.0 | 48.0 | 32.0 | 62.0 | 24.0 | 54.0 | 15.6 | 4.0 |

**NOTES:**

1. ACCESS DOORS CAN SWING 180 DEGREES.

2. COIL SECTION ACCESS - 24" MINIMUM FOR PIPING AND CONNECTIONS; USE DIMENSION "A" FOR COIL SECTION REMOVAL (MAJOR SERVICE PROCEDURE).

3. CONDENSATE DRAIN AND COIL CONNECTIONS PROVIDED ON ONE SIDE ONLY - REFER TO UNIT NOMENCLATURE.

4. BLOWER/MOTOR ASSEMBLY SERVICE CAN BE PERFORMED FROM EITHER SIDE BUT IS EASIEST WHEN MOTOR/BLOWER ASSEMBLY CAN BE REACHED FROM EITHER SIDE. MOTOR TERMINAL BOX MAY BE ACCESSIBLE FROM EITHER SIDE, DEPENDING ON THE MOTOR.

5. PRE-FILTER ACCESS - FILTERS CAN BE SERVICED FROM EITHER SIDE.

6. ELECTRICAL ACCESS - POWER ENTRY, VFD AND CONTROL BOX HAVE SAME HAND OF CONNECTION AS COIL - REFER TO UNIT NOMENCLATURE. **NOTE**: 120V/1PH UNITS HAVE VFD LOCATED ON SIDE OPPOSITE CONNECTION SIDE.

7. VFD ACCESS IS FROM RIGHT OR LEFT SIDE ONLY.

8. ALLOW ADEQUATE CLEARANCE FOR CONDENSATE DRAIN TRAP BELOW THE CONDENSATE DRAIN CONNECTION.

# Service Clearances
## Arrangement D
## (with integral HEPA Filter)

# HHA SERVICE CLEARANCES
Arrangement D
(with integral HEPA Filter)

| Service Clearances (inches) | | | | | | | | | | | | | | | |
|---|---|---|---|---|---|---|---|---|---|---|---|---|---|---|---|
| Unit Size | Overall | | | Door Swing | | | HEPA Access | | Blower/ Motor Access | | Coil Section Access | | Prefilter Access | | Sus-pension Clearance |
| | A | B | C | D | E | F | G | H | J | K | L | M | N | P | R |
| 04 | 33.2 | 93.4 | 22.0 | 19.0 | 16.0 | 13.0 | 32.0 | 19.0 | 42.0 | 25.0 | 45.0 | 20.2 | 40.0 | 14.3 | 3.0 |
| 06 | 33.2 | 93.4 | 22.0 | 19.0 | 16.0 | 13.0 | 32.0 | 19.0 | 42.0 | 25.0 | 45.0 | 20.2 | 40.0 | 14.3 | 3.0 |
| 08 | 39.2 | 93.4 | 22.0 | 19.0 | 16.0 | 13.0 | 38.0 | 19.0 | 42.0 | 25.0 | 45.0 | 20.2 | 46.0 | 14.3 | 3.0 |
| 12 | 39.2 | 93.4 | 22.0 | 19.0 | 16.0 | 13.0 | 38.0 | 19.0 | 42.0 | 25.0 | 45.0 | 20.2 | 46.0 | 14.3 | 3.0 |
| 16 | 48.2 | 97.5 | 28.0 | 19.0 | 20.0 | 13.0 | 50.0 | 19.0 | 48.0 | 32.0 | 62.0 | 24.0 | 54.0 | 15.6 | 4.0 |
| 20 | 48.2 | 97.5 | 28.0 | 19.0 | 20.0 | 13.0 | 50.0 | 19.0 | 48.0 | 32.0 | 62.0 | 24.0 | 54.0 | 15.6 | 4.0 |
| 25 | 48.2 | 97.5 | 28.0 | 19.0 | 20.0 | 13.0 | 50.0 | 19.0 | 48.0 | 32.0 | 62.0 | 24.0 | 54.0 | 15.6 | 4.0 |

LEFT SIDE - MIRROR RIGHT SIDE ACCESS DOORS AND SERVICE CLEARANCES

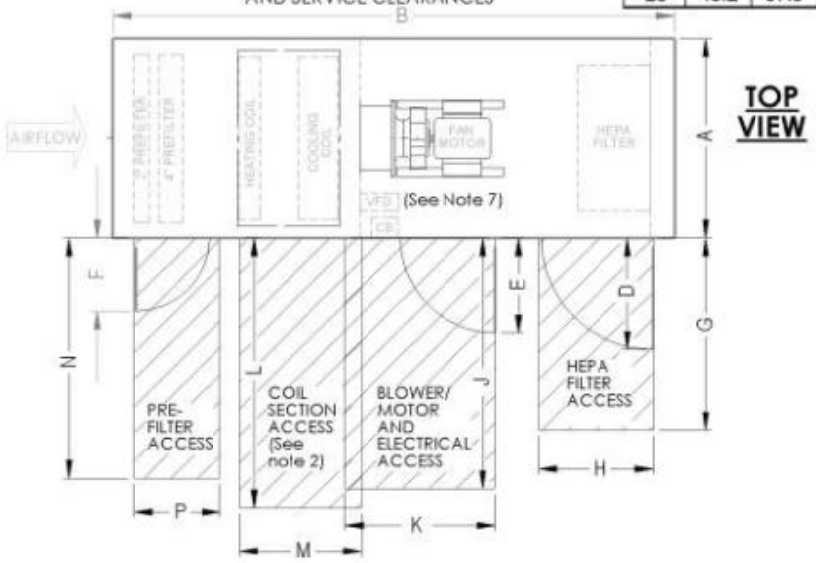


TOP VIEW

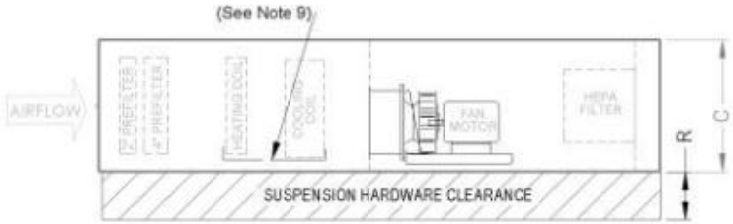


RIGHT SIDE VIEW

**NOTES:**

1. ACCESS DOORS CAN SWING 180 DEGREES.
2. COIL SECTION ACCESS - 24" MINIMUM FOR PIPING AND CONNECTIONS; USE DIMENSION "A" FOR COIL SECTION REMOVAL (MAJOR SERVICE PROCEDURE).
3. CONDENSATE DRAIN AND COIL CONNECTIONS PROVIDED ON ONE SIDE ONLY - REFER TO UNIT NOMENCLATURE.
4. BLOWER/MOTOR ASSEMBLY SERVICE CAN BE PERFORMED FROM EITHER SIDE BUT IS EASIEST WHEN MOTOR/BLOWER ASSEMBLY CAN BE REACHED FROM EITHER SIDE. MOTOR TERMINAL BOX MAY BE ACCESSIBLE FROM EITHER SIDE, DEPENDING ON THE MOTOR.
5. HEPA FILTER ACCESS - CAN BE PERFORMED FROM EITHER SIDE.
6. PRE-FILTER ACCESS - FILTERS CAN BE SERVICED FROM EITHER SIDE.
7. ELECTRICAL ACCESS - POWER ENTRY, VFD AND CONTROL BOX HAVE SAME HAND OF CONNECTION AS COIL - REFER TO UNIT NOMENCLATURE. **NOTE**: 120V/1PH UNITS HAVE VFD LOCATED ON SIDE OPPOSITE CONNECTION SIDE.
8. VFD ACCESS IS FROM RIGHT OR LEFT SIDE ONLY.
9. ALLOW ADEQUATE CLEARANCE FOR CONDENSATE DRAIN TRAP BELOW THE CONDENSATE DRAIN CONNECTION.

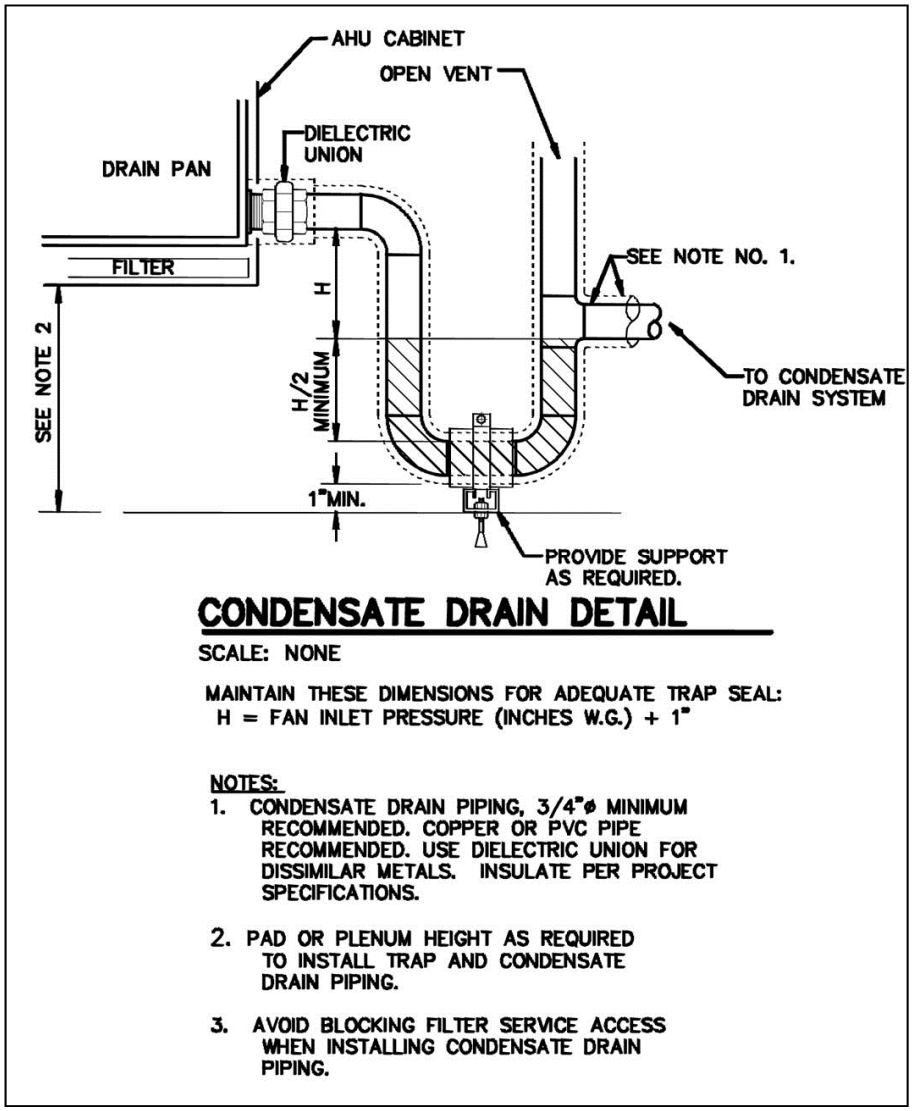


**Fig. 6 — Condensate Drain**

## INSTALLATION

**Condensate Drain —** Install a trapped condensate drain line at unit drain connection. All HHA units have a 3/4 in. FPT condensate main and auxiliary drain connections.

**WARNING!** To prevent excessive build-up of condensate in drain pan, adequate trap clearance (trap depth) must be provided beneath the unit as indicated in Fig. 6.

Measure maximum design negative static pressure upstream from the fan. Referring to Fig. 6, height “H” must be 1” larger than the fan inlet static pressure linches w.g.) at the design operating conditions. Prime enough water in trap to prevent losing seal when starting up the unit. After the fan is running with the design fan inlet (negative) pressure, the elevation of the water on the unit side of the trap will be 1” below the drain invert.

Provide freeze-up protection as required to insure reliable condensate drainage. Freeze protection measures are customer-supplied and installed.

**Water Coil Piping Recommendations**

Water coils are piped by connecting the supply at the bottom and the return at the top. This is “counterflow” piping arrangement and is necessary to achieve rated thermal performance.

> **CAUTION!** Piping the other way (parallel) will result in reduced thermal performance!

Coil Venting: Water coils are not provided with venting devices. Insure that the circulating water system has proper air venting capability. If vents are required at the coil, install them in the field piping attached to the return (upper) connection.

**Steam Coil Piping Recommendations**

GENERAL — Use straps around the coil casing to lift and place the coil.

**CAUTION**

To prevent damage to the coil or coil headers: **Do not use the headers to lift the coil.** Support the piping and coil connections independently. Do not use the coil connections to support piping. When tightening coil connections, use a backup wrench on the coil connection stub-out.

NOTE: Piping should be installed by a qualified installer familiar with the type of piping to be installed. Perform piping to industry best practices.

STEAM COILS — Position the steam supply connection at the top of the coil, and the return (condensate) connection at the bottom.

Figure 7 illustrates the normal piping components and the suggested locations for high, medium, or low-pressure steam coils. The low-pressure application (zero to 15 psig) can dispense with the ¼-in. petcock for continuous venting located above the vacuum breaker (check valve).

Note the horizontal location of the 15-degree check valve, and the orientation of the gate/pivot. This valve is intended to relieve any vacuum forming in the condensate outlet of a condensing steam coil, and to seal this port when steam pressure is again supplied to the coil. It must not be installed in any other position, and should not be used in the supply line.

For coils used in tempering service, or to preheat outside air, install an immersion thermostat in the condensate line ahead of the trap. This will shut down the supply fan and close the outdoor damper whenever the condensate falls to a predetermined point, perhaps 120 F.

NOTE: DO NOT use an immersion thermostat to override a duct thermostat and open the steam supply valve. For vacuum return systems, the vacuum breaking check valve would be piped into the condensate line between the trap and the gate valve instead of open to the atmosphere.

Figure 8 illustrates the typical piping at the end of every steam supply main. Omitting this causes many field problems and failed coils.

Figure 9 shows the typical field piping of multiple coils. Use this only if the coils are the same size and have the same pressure drop. If this is not the case, an individual trap must be provided for each coil.

Figure 10 shows a multiple coil arrangement applied to a gravity return, including the open air relief to the atmosphere, which DOES NOT replace the vacuum breakers.

Figure 11 illustrates the basic condensate lift piping.

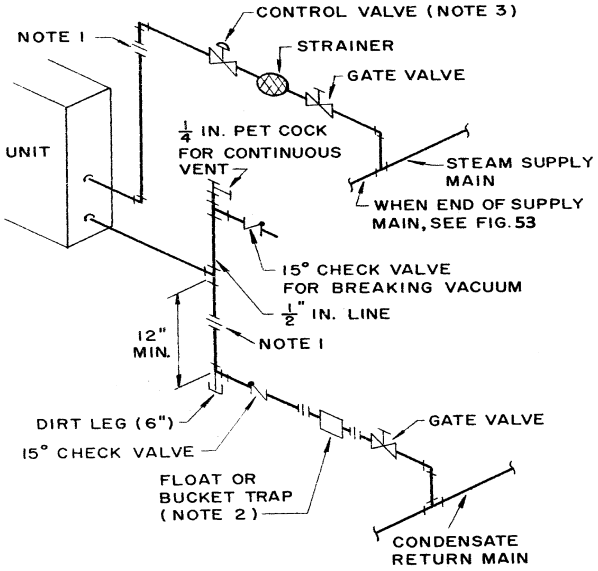


**Fig. 7 — Low, Medium or High Pressure Coil Piping**

NOTES:

1. Flange or union is located to facilitate coil removal.
2. Flash trap may be used if pressure differential between steam and condensate return exceeds 5 psi.
3. Dirt leg may be replaced with a strainer. If so, tee on drop can be replaced by a reducing ell.
4. The petcock is not necessary with a bucket trap or any trap which has provision for passing air. The great majority of high or medium pressure returns end in hot wells or deaerators which vent the air.

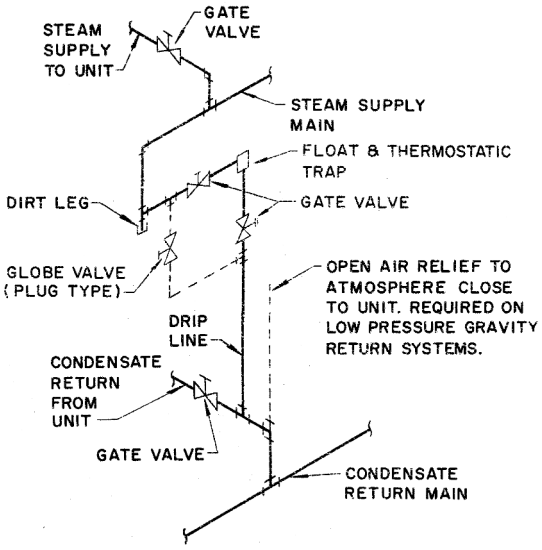


**Fig. 8 — End of Steam Supply Main Piping Detail**

NOTES (Figure 8):

1. A bypass is necessary around trap and valves when uninterrupted operation is necessary.
2. Bypass to be the same size as trap orifice but never less than 1/2 inch.

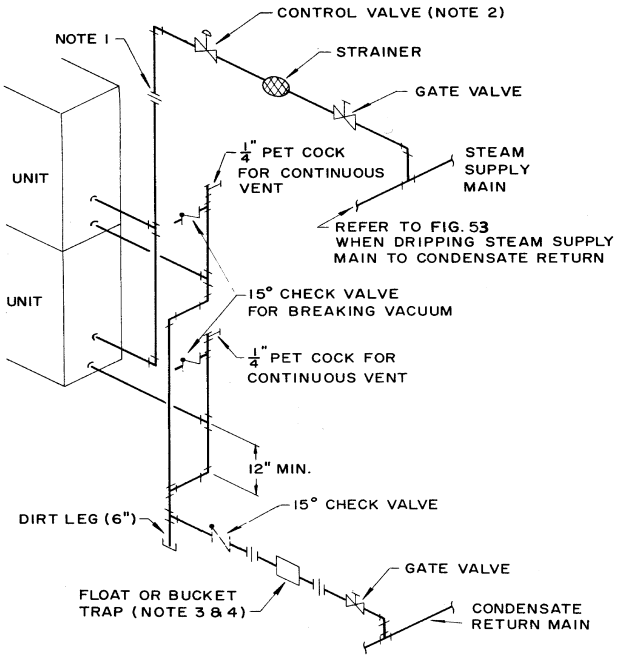


**Fig. 9 — Multiple Coil High Pressure Piping**

NOTES:

1. Flange or union is located to facilitate coil removal.
2. When a bypass with control is required.
3. Flash trap can be used if pressure differential between supply and condensate return exceeds 5 psi.
4. *Coils with different pressure drops require individual traps. This is often caused by varying air velocities across the coil bank.*
5. Dirt leg may be replaced with a strainer. If so, tee on drop can be replaced by a reducing ell.
6. The petcock is not necessary with a bucket trap or any trap which has provision for passing air. The great majority of high pressure return mains terminate in hot wells or deaerators which vent the air.

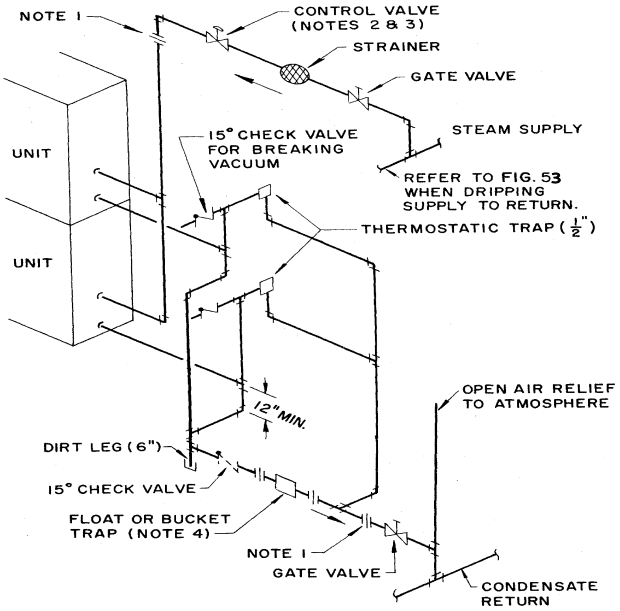


**Fig. 10 — Multiple Coil Low Pressure Piping Gravity Return**

NOTES:

1. Flange or union is located to facilitate coil removal.
2. When control valve is omitted on multiple coils in parallel air flow.
3. When a bypass with control is required.
4. *Coils with different pressure drops require individual traps. This is often caused by varying air velocities across the coil bank.*

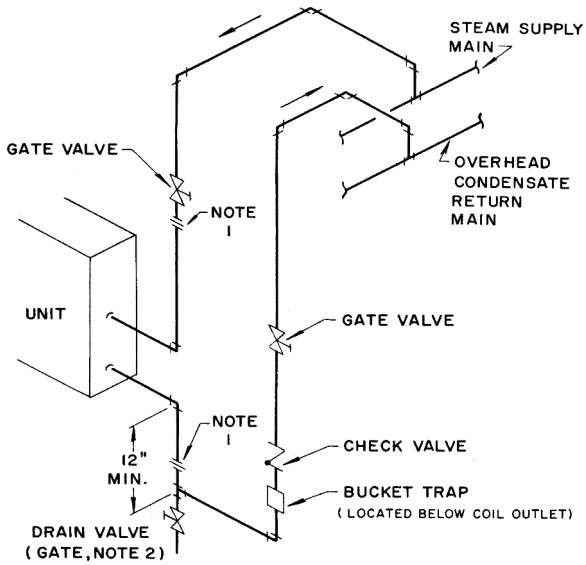


**Fig. 11 — Multiple Coil Low Pressure Piping Gravity Return**

NOTES:

1. Flange or union is located to facilitate coil removal.
2. To avoid water hammer, drain coil before admitting steam.
3. Do not exceed one foot of lift between trap discharge and return main for each pound of pressure differential.
4. *Do not use this arrangement for units handling outside air.*

Following the piping diagrams in Fig. 7-11, make all connections while observing the following precautions:

• Install a drip line and trap on the pressure side of the inlet control valve. Connect the drip line to the return line downstream of the return line trap.

• To prevent scale or foreign matter from entering the control valve and coil, install a 3/32-in. mesh strainer in the steam supply line upstream from the control valve.

• Provide air vents for the coils to eliminate noncondensable gases.

• Select a control valve according to the steam load, not he coils supply connection size. Do not use an oversized control valve.

• Do not use bushings that reduce the size of the header return connection. The return connection should be the same size as the return line and reduced only at the downstream trap.

• To lift condensate above the coil return line into overhead steam mains, or pressurized mains, install a pump and receiver between the condensate trap and the pressurized main. Do not try to lift condensate with modulating or on-and-off steam control valves. Use only
15-degree check valves, as they open with a lower water head. Do not use 45-degree or vertical-lift check valves.

• Use float and thermostatic traps. Select the trap size according to the pressure difference between the steam supply main and the return main.

• Load variations can be caused by uneven inlet air distribution or temperature stratification.

• Drain condensate out of coils completely at the end of the heating season to prevent the formation of acid.

**Coil Freeze-Up Protection**

STEAM COILS — When used for preheating outdoor air in pressure or vacuum systems, an immersion thermostat to control outdoor-air damper and fan motor is recommended. This control is actuated when steam supply fails or condensate temperature drops below an established level, such as 120 to 150 F. A vacuum breaker should also be used to equalize coil pressure with the atmosphere when steam supply throttles close. Steam should not be modulated when outdoor air is below 40 F.

On low-pressure and vacuum steam-heating systems, the thermostat may be replaced by a condensate drain with a thermal element. This element opens and drains the coil when condensate temperature drops below 165 F. Note that condensate drains are limited to 5 psig pressure.

INNER DISTRIBUTING TUBE STEAM COILS — The inner distributing tube (IDT) steam coil used in the HHA air handling units has an inner tube pierced to facilitate the distribution of the steam along the tube's length. The outer tubes are expanded into plate fins. The completed assembly includes the supply and condensate header and side casings which are built to slant the fin/tube bundle back toward the condensate header. The slanting of the assembly ensures that condensate will flow toward the drains. This condensate must be removed through the return piping to prevent premature failure of the coil. The fin/tube bundle is slanted vertically for horizontal airflow coils, and horizontally for vertical airflow coils.

IDT Steam Coil Piping — The following piping guidelines will contribute to efficient coil operation and long coil life:

1. Use full size coil outlets and return piping to the steam trap. Do not bush return outlet to the coil. Run full size to the trap, reduce at the trap.
2. Use float and thermostatic (F & T) traps only for condensate removal. Trap size selection should be based on the difference in pressure between the steam supply main and the condensate return main. It is good practice to select a trap with 3 times the condensate rating of the coil to which it is connected.
3. Use thermostatic traps for venting only.
4. Use only 1/2-in., 15-degree swing check valves installed horizontally, piped open to atmosphere, and located at least 12 in. above the condensate outlet. Do not use 45-degree, vertical lift and ring check valves.
5. The supply valve must be sized for the maximum anticipated steam load.
6. Do not drip steam mains into coil sections. Drip them on the pressure side of the control valve and trap them into the return main beyond the trap for the coil.
7. Do not use a single trap for two or more coils installed in series. Where two or more coils are installed in a single bank, in parallel, the use of a single trap is permissible, but only if the load on each coil is equal. Where loads in the same coil bank vary, best practice is to use a separate trap for each coil. Variation in load on different coils in the same bank may be caused by several factors. Two of the most common are uneven airflow distribution across the coil and stratification of inlet air across the coil.
8. Do not try to lift condensate above the coil return into an overhead main, or drain into a main under pressure with a modulating or on/off steam control valves. A pump and receiver should be installed between the coil condensate traps and overhead mains and return mains under pressure.
9. Use a strainer (3/32-in. mesh) on the steam supply side, as shown in the piping diagrams, to avoid collection of scale or other foreign matter in the inner tube distributing orifices.

NOTE: IDT coils must be installed with the tubes draining toward the header end of the coil. The IDT steam coils are pitched toward the header end as installed in the unit.

10. Ensure the AHU (air-handling unit) is installed level to maintain the inherent slope. Also ensure the unit is installed high enough to allow the piping to be installed correctly, especially the traps which require long drip legs.
11. Do not fail to provide all coils with the proper air vents to eliminate noncondensable gasses.
12. Do not support steam piping from the coil units. Both mains and coil sections should be supported separately.

IDT Steam Coil Installation — Refer to drawings to position the coils properly with regard to the location of the supply and return connections. Ensure that the IDT coil is pitched with the tubes draining toward the header. The AHUs provide proper coil pitch when the AHU is installed level. Refer to schematic piping diagrams and piping connection notes for the recommended piping methods.

**Refrigerant Piping, Direct-Expansion (DX) Coils —**

Direct-expansion coils are divided into 1 or 2 splits depending upon the unit size and coil circuiting. Each split requires its own distributor nozzle, expansion valve, and suction piping. Suction connections are on the air entering side when the coil is properly installed. Matching distributor connections for each coil split are on the air leaving side. See unit label or certified drawing to assure connection to matching suction and liquid connections.

The lower split of face split coils should be *first on, last off.*

Row split coils utilize special intertwined circuits; either split of these row split coils can be *first on, last off*.

**CAUTION**

Direct-expansion coils are shipped pressurized with dry nitrogen. Release pressure from each coil split through valves in protective caps before removing caps.

Do not leave piping open to the atmosphere unnecessarily. Water and water vapor are detrimental to the refrigerant system. Until the piping is complete, recap the system and charge with nitrogen at the end of each workday. Clean all piping connections before soldering joints.

Failure to follow these procedures could result in personal injury or equipment damage.

SUCTION PIPING — Connect suction piping as shown in Fig. 12 for face split coil.

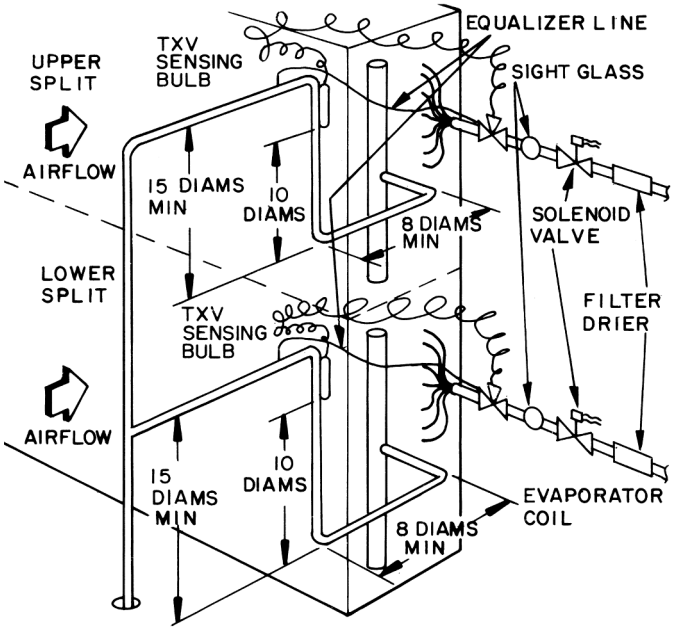


**Fig. 12 — Face Split Coil Suction Line Piping**
(TXV — Thermostatic Expansion Valve)

Suction line from coil connection to end of the 15-diameter-long riser should be same tube size as coil connection to ensure proper refrigerant velocity.

Size remaining suction line to compressor for a pressure drop equivalent to 2.0 F. This will provide a total suction line header pressure drop equivalent to approximately 2.5 F. Refer to Fig. 13 for piping risers to the compressor.

To minimize the possibility of flooded starts and compressor damage during prolonged light load operation, install an accumulator in the suction line or a solenoid in the liquid line of last-on, first off split in row-split applications.

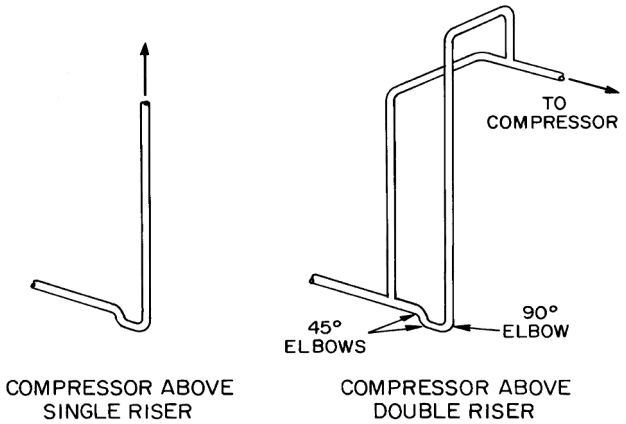


**Fig. 13 — Suction Line Riser Piping**

EXPANSION VALVE PIPING — Distributor nozzles and expansion valves sized for acceptable performance for a range of conditions are factory supplied. Use the AHU (air-handling unit) selection program in the electronic catalog to select optimal nozzle sizes.
Circuiting selection should result in a circuit loading of 0.8 to 2.0 tons per circuit at design load. Circuit loading must be evaluated at minimum load to ensure that it does not drop below 0.6 tons per circuit. Solenoid valves may be used, if necessary, to shut off the refrigerant supply to individual expansion valves to maintain adequate coil circuit loading.
Compressor minimum unloading and TXV quantity is necessary to determine minimum tonnage per circuit.
Minimum Unloading Equation:

$$\frac{\text{(Tons per Circuit) x (Minimum Unloading) x (Total no. of TXVs}}{\text{no. of TXVs Active}}$$

Example:

| | |
|---|---|
| Condensing Unit: | 38ARS012 |
| Minimum Unloading: | 33% |
| Coil: | 6 row, 11 FPI, Half Circuit |
| Coil Tons per Circuit: | 1.68 |
| Total TXVs: | 2 |

In the first example we will determine the tons per circuit when both TXVs are active and the compressor is unloaded to its minimum of 33%

$$= \frac{\text{(1.68 Tons per Circuit) x (33\% Minimum Unloading) x (2 TXVs)}}{\text{2 TXVs Active}}$$

$$= \frac{(1.68) \times (.33) \times (2)}{2}$$

= .55 tons per circuit at minimum unloading UNACCEPTABLE

If we install a liquid line solenoid valve before one of the TXVs and close it so that only one TXV is active when the compressor is unloaded to its minimum of 33%, we see the following:

$$= \frac{\text{(1.68 Tons per Circuit) x (33\% Minimum Unloading) x (2 TXVs)}}{\text{1 TXV Active}}$$

$$= \frac{(1.68) \times (.33) \times (2)}{1}$$

= 1.10 tons per circuit at minimum unloading ACCEPTABLE

There are three different options to control tons per circuit when using an unloading compressor. The first is to use drop solenoid valve control as illustrated above and let the suction cutoff unloaders “ride” with the load. The second is to use drop solenoid valve control as illustrated above with electric unloaders and let the control algorithm determine the combination of solenoid valves and unloaders to limit tons per circuit to acceptable limits. The third is to limit the minimum amount of unloading so that tons per circuit is within acceptable limits.
TXV SENSING BULB—sensing bulb for TXV is shipped coiled up inside cabinet. Remove coil connection panel, route sensing bulb out through suction line hole in panel, reinstall panel. Locate sensing bulb on horizontal section of suction line , and attach to tubing using copper plated strap. Attach sensing bulb between but no lower than the 2-o’clock and 10-o’clock positions. Make sure that there is good contact between the bulb cylinder and tubing. INSULATE the sensing bulb to insure that it reads the temperature of the suction line. For dual-circuit DX coils, make sure to locate the sensing bulb on the correct suction line.

**Electrical Installation**

**WARNING**

To avoid possible injury or death due to electrical shock, open the power supply disconnect switch and secure it in an open position during installation.

All field-installed wiring, including the electrical ground, MUST comply with the National Electrical Code (NEC) as well as applicable local codes. In addition, all field wiring must conform to the Class II temperature limitations described in the NEC.
Refer to factory wiring diagrams installed in the unit.

**CAUTION**

Use only copper conductors for field-installed electrical wiring. Unit terminals are not designed to accept other types of conductors.

## INSTALLATION—FACTORY OPTIONS

**Final (HEPA) Filter APD Gauge Option—** See Figure 14. Units provided with the final filter APD gauge option have tubing routed internally from static pressure ports across the HEPA filter. The static ports (see Figure 15) allow the gauge to measure the air pressure drop (APD) across the HEPA filter. Can be used with final filter with non-HEPA efficiency rating.

Gauge span is 0-4.0in w.g. Typical clean HEPA filter APD is approximately 0.7in w.g., and typical fully loaded APD is approximately 1.7in w.g. These will vary with the actual airflow. Refer to APD table for actual values.

The APD gauge is attached from the outside and can be serviced by removing the cover panel (8 screws) and then removing the gauge mounting screws and lugs. **NOTE:** The pressure tap tubing is internally routed from the pressure taps and cannot be removed or re-routed. It is acceptable to remove the gauge and replace with field-provided gauge or other devices, and to connect these to the factory tubing.

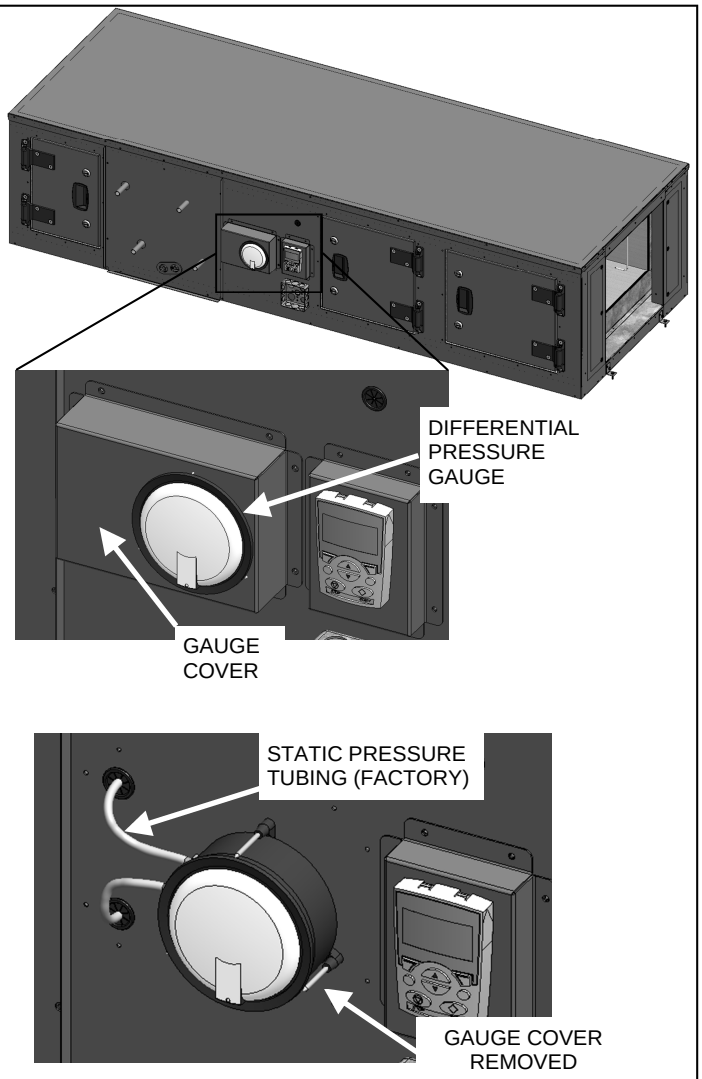


**Fig. 14 — HEPA (Final) Filter APD Gauge**

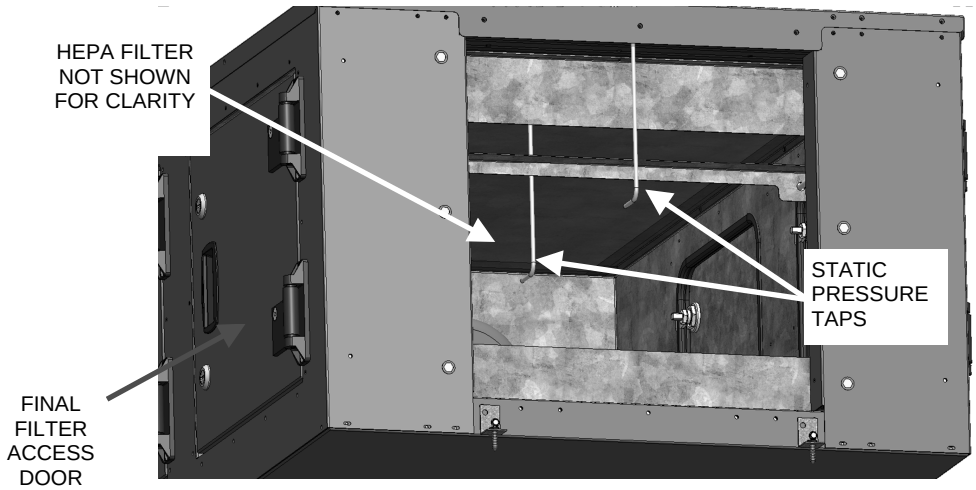


**Fig. 15 — HEPA (Final) Filter APD Static Taps**

## INSTALLATION—FACTORY OPTIONS

**Static Pressure Ports Option—** See Figure 16. Units provided with the “static ports” option have 4ea static pressure taps to allow connection to field APD gauges or other devices to monitor filter loading. The taps have factory tubing routed to a gauge block on the side of the unit. The gauge block has 2 ports marked for the prefilters (2”/4”) and 2 ports for the final (HEPA) filter (“HEPA”). Differential pressure across the first two ports indicates the prefilter APD, and differential pressure across the 2nd pair of ports indicates the final (HEPA) filter APD. The ports indicated by “+” are the high side, and the ports with “-” are the low side. Ports are hose barb type connection, ready to accept 1/4” poly tubing.

Ports may be used for other purposes such as balancing by installing field tubing and devices as needed.

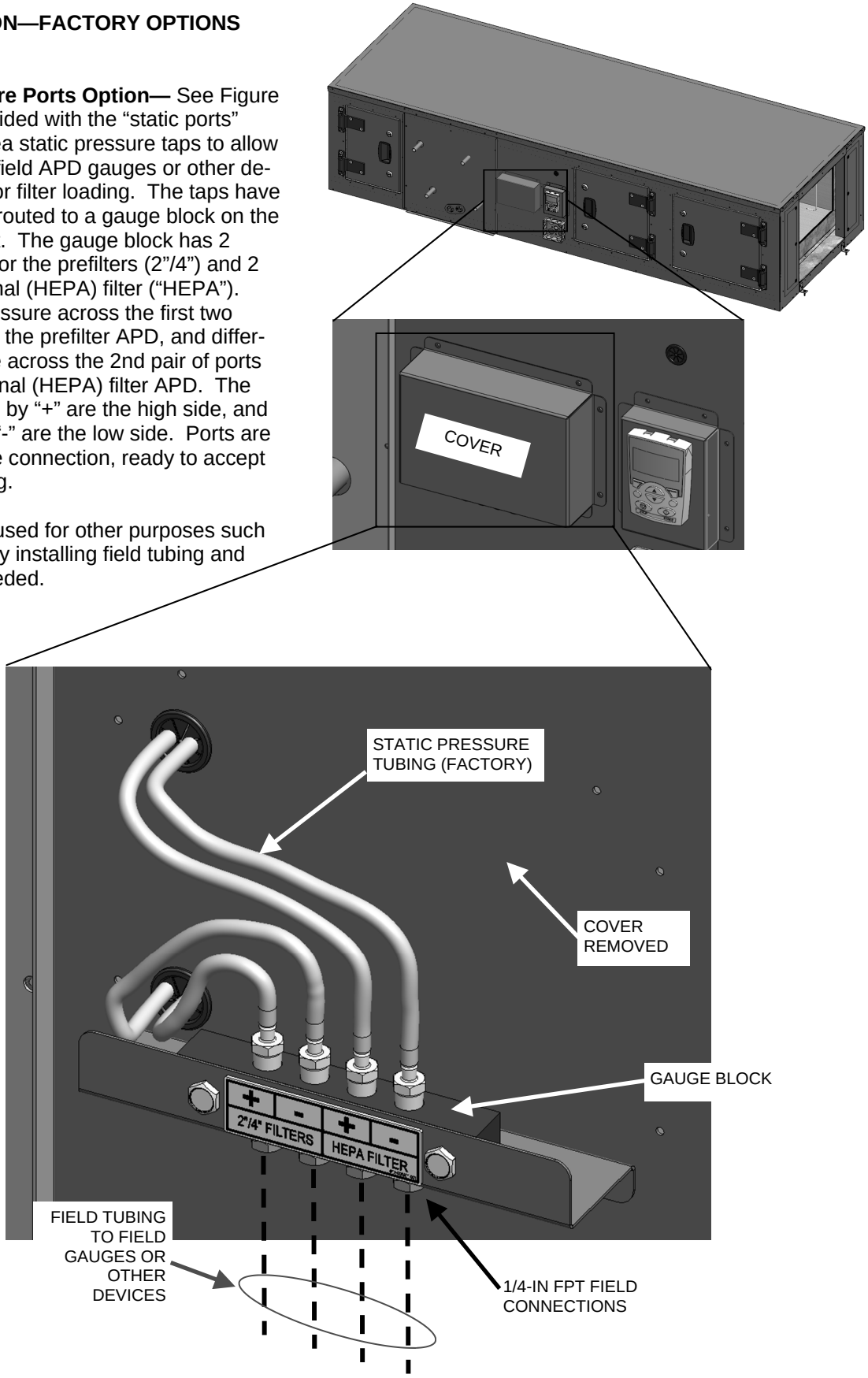


**Fig. 16 — Static Ports Option Details**

## FILTER APD TABLES

**Table 2**
**Filter Air Pressure Drop**

### 2" and 4" Pre-Filters

| HHA Unit Size | CFM | Filter Area (sqft) | Face Vel (fpm) (FV) - MERV8/13 | MERV 8 - 2" APD (inwc) | MERV 13 - 4" APD (inwc) | Total Prefilter APD (inwc) |
|---|---|---|---|---|---|---|
| 04/06 | 300 | 2.25 | 133 | 0.04 | 0.04 | 0.08 |
| 04/06 | 400 | 2.25 | 178 | 0.06 | 0.06 | 0.12 |
| 04/06 | 500 | 2.25 | 222 | 0.08 | 0.08 | 0.16 |
| 04/06 | 600 | 2.25 | 267 | 0.10 | 0.11 | 0.21 |
| 04/06 | 700 | 2.25 | 311 | 0.12 | 0.14 | 0.26 |
| 04/06 | 750 | 2.25 | 333 | 0.14 | 0.16 | 0.29 |
| 08/12 | 600 | 2.75 | 218 | 0.07 | 0.08 | 0.15 |
| 08/12 | 700 | 2.75 | 255 | 0.09 | 0.10 | 0.19 |
| 08/12 | 800 | 2.75 | 291 | 0.11 | 0.12 | 0.24 |
| 08/12 | 900 | 2.75 | 327 | 0.13 | 0.15 | 0.28 |
| 08/12 | 1000 | 2.75 | 364 | 0.16 | 0.18 | 0.34 |
| 08/12 | 1100 | 2.75 | 400 | 0.18 | 0.21 | 0.39 |
| 08/12 | 1200 | 2.75 | 436 | 0.21 | 0.24 | 0.45 |
| 08/12 | 1300 | 2.75 | 473 | 0.24 | 0.28 | 0.52 |
| 08/12 | 1400 | 2.75 | 509 | 0.28 | 0.32 | 0.59 |
| 08/12 | 1500 | 2.75 | 545 | 0.31 | 0.36 | 0.67 |
| 16/20/25 | 1600 | 5.50 | 291 | 0.11 | 0.12 | 0.24 |
| 16/20/25 | 1700 | 5.50 | 309 | 0.12 | 0.14 | 0.26 |
| 16/20/25 | 1800 | 5.50 | 327 | 0.13 | 0.15 | 0.28 |
| 16/20/25 | 1900 | 5.50 | 345 | 0.14 | 0.16 | 0.31 |
| 16/20/25 | 2000 | 5.50 | 364 | 0.16 | 0.18 | 0.34 |
| 16/20/25 | 2100 | 5.50 | 382 | 0.17 | 0.19 | 0.36 |
| 16/20/25 | 2200 | 5.50 | 400 | 0.18 | 0.21 | 0.39 |
| 16/20/25 | 2300 | 5.50 | 418 | 0.20 | 0.23 | 0.42 |
| 16/20/25 | 2400 | 5.50 | 436 | 0.21 | 0.24 | 0.45 |
| 16/20/25 | 2500 | 5.50 | 455 | 0.23 | 0.26 | 0.49 |
| 16/20/25 | 2600 | 5.50 | 473 | 0.24 | 0.28 | 0.52 |
| 16/20/25 | 2700 | 5.50 | 491 | 0.26 | 0.30 | 0.56 |
| 16/20/25 | 2800 | 5.50 | 509 | 0.28 | 0.32 | 0.59 |
| 16/20/25 | 2900 | 5.50 | 527 | 0.29 | 0.34 | 0.63 |
| 16/20/25 | 3000 | 5.50 | 545 | 0.31 | 0.36 | 0.67 |

### 12" HEPA Filter

| HHA Unit Size | CFM | HEPA Face Area (sqft) | HEPA Face Vel (fpm) | HEPA FLTR APD (inwc) |
|---|---|---|---|---|
| 04/06 | 300 | 2.17 | 138 | 0.36 |
| 04/06 | 400 | 2.17 | 184 | 0.49 |
| 04/06 | 500 | 2.17 | 230 | 0.63 |
| 04/06 | 600 | 2.17 | 276 | 0.77 |
| 04/06 | 700 | 2.17 | 323 | 0.92 |
| 04/06 | 750 | 2.17 | 346 | 0.99 |
| 08/12 | 600 | 2.69 | 223 | 0.61 |
| 08/12 | 700 | 2.69 | 260 | 0.72 |
| 08/12 | 800 | 2.69 | 297 | 0.84 |
| 08/12 | 900 | 2.69 | 334 | 0.96 |
| 08/12 | 1000 | 2.69 | 372 | 1.08 |
| 08/12 | 1100 | 2.69 | 409 | 1.21 |
| 08/12 | 1200 | 2.69 | 446 | 1.34 |
| 08/12 | 1300 | 2.69 | 483 | 1.48 |
| 08/12 | 1400 | 2.69 | 520 | 1.61 |
| 08/12 | 1500 | 2.69 | 557 | 1.76 |
| 16/20/25 | 1600 | 5.14 | 311 | 0.88 |
| 16/20/25 | 1700 | 5.14 | 331 | 0.95 |
| 16/20/25 | 1800 | 5.14 | 350 | 1.01 |
| 16/20/25 | 1900 | 5.14 | 370 | 1.07 |
| 16/20/25 | 2000 | 5.14 | 389 | 1.14 |
| 16/20/25 | 2100 | 5.14 | 409 | 1.21 |
| 16/20/25 | 2200 | 5.14 | 428 | 1.28 |
| 16/20/25 | 2300 | 5.14 | 448 | 1.35 |
| 16/20/25 | 2400 | 5.14 | 467 | 1.42 |
| 16/20/25 | 2500 | 5.14 | 486 | 1.49 |
| 16/20/25 | 2600 | 5.14 | 506 | 1.56 |
| 16/20/25 | 2700 | 5.14 | 525 | 1.63 |
| 16/20/25 | 2800 | 5.14 | 545 | 1.71 |
| 16/20/25 | 2900 | 5.14 | 564 | 1.78 |
| 16/20/25 | 3000 | 5.14 | 584 | 1.86 |

## START-UP

### Pre-Startup

**Building Envelope—**All building windows and doors should be installed and closed before starting unit. During summer construction, avoid unit sweating by allowing for gradual pull down: use elevated chilled water temperature, reduce chilled water flow rate (gpm), use maximum available airflow.

**Heating Fluid Temperature-**Maximum entering water temperature is 180°F, unless nameplate indicates 200°F. **CAUTION**: If unit is marked for 200°F maximum entering water temperature, customer must ensure that water vaporization does not occur especially at higher elevations when entering water temperatures are greater than 190°F.

**Temperature Controls-**Check that unit or wall-mounted thermostat or field-supplied controller s connected to the unit.

**Outside Air and Freeze Protection**-

**WARNING: Insure that the unit is protected against freezing conditions Failure to provide freeze protection may result in equipment or property damage.** Freeze protection measures are customer-provided and installed and include but are not limited to low-limit thermostats, automatic temperature controls, and use of glycol based heat transfer fluids (see section FREEZE PROTECTION OF WATER PIPING).

1. If "locking quadrant" manual damper operator provided, set to desired position.
2. If damper actuator provided, insure that actuator opens the damper when the fan turns on, and closes when fan stops. Test mixing box controls to make sure OA damper closes on power failure or upon activation of customer-supplied and installed low limit thermostat or other freeze protection device.

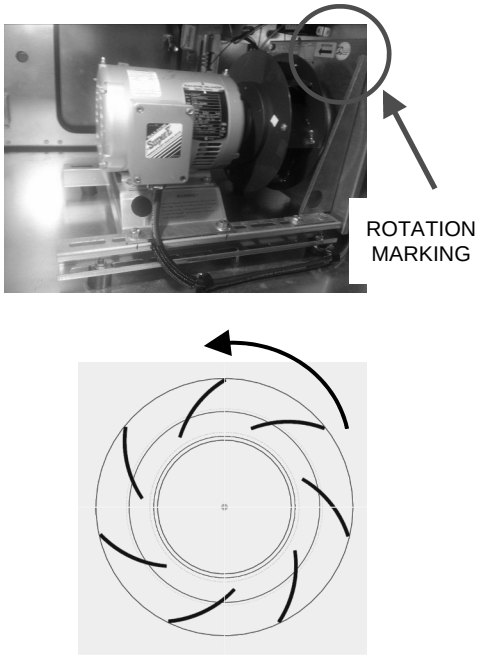


**Fig. 17 — Fan Wheel Rotation**

### Variable Frequency Drive (VFD) Setup

The VFD is factory programmed to protect the motor/fan system and limit operating range as needed. Refer to Tables 3 and 4 for VFD parameter settings.

**Start-Up Check List —** Remove all construction debris from unit interior. *Remove tools and all foreign objects before starting unit.*

FILTERS — Install unit filters in all filter sections. Protect open filters from drywall dust and construction debris.

MOTOR/FAN ASSEMBLY

2. Hand turn fan to make certain it turns freely and fan wheel does not rub the inlet ring.
3. Check fan speed with a laser-type tachometer or use VFD output to confirm operating speed.
4. Check direction of rotation (see Fig. 17). Arrow on drive side of fan housing indicates correct direction of rotation.
5. Check vibration. If excessive vibration occurs, check for the following:
   - A. Shipping screws removed.
   - B. Inadequate airflow.
   - C. Damaged wheel.
   - D. Loose bearings.
   - E. Loose mounting bolts.
   - F. Motor out of balance.
   - G. External vibration isolators improperly adjusted.
   - H. Out-of-balance or corroded wheel (rebalance or replace if necessary).
   - I. Accumulation of material on wheel (remove excess material).

**DANGER**

NEVER enter an enclosed fan cabinet or reach into a unit while the fan is running.
LOCK OPEN AND TAG the fan motor power disconnect switch before working on a fan. Take fuses with you and note removal on tag. Electric shock can cause personal injury or death.
LOCK OPEN AND TAG the electric heat coil power disconnect switch before working on or near heaters.
Failure to follow these warnings could lead to personal injury or death.

## SERVICE

### General

1. Place a suitable walkway to protect floor insulation whenever entering the fan section.
2. Review Safety Considerations at beginning of these instructions. Good safety habits are important tools when performing service procedures.
3. To make speed measurements, use a laser-style tachometer or use VFD output.

### Fan Motor Replacement

**DANGER**

Failure to torque impeller set screws properly may lead to impeller failure and high velocity debris that is a lethal hazard!

Failure to rebalance wheel/motor after reassembly could result in unacceptable vibration, possibly leading to impeller failure—lethal hazard!

Failure to follow these warnings could lead to personal injury or death.

**NOTE**: After reassembly of the motor/wheel assembly, the entire assembly must be dynamically rebalanced in accordance with International Standard ISO 1940-1.
**WARNING**: Failure to rebalance motor/wheel assembly in **step 9** could result in dangerous operating conditions and will void the unit warranty. Shut off motor power and lock out power supply.

Procedure:

1. Disconnect and tag power wires at motor terminals.
2. Remove fan motor and wheel assembly from mounting plate (Figure 18).
3. Remove motor/wheel assembly from the AHU (Figure 19).
4. See Figure 20 and 21. Loosen all set-screws. Depending on the size of the bushing, unscrew one or two set-screws completely, oil them and screw them into the removal holes (Figure 21 item 4). Pull on one or both set-screws, until the bushing (item 1) comes free of the hub (item 2).
5. Remove the impeller.
6. Install impeller on new motor (or new impeller on motor): Clean all bare surfaces (locating surfaces of bushings and motor shaft) and degrease them.
7. Push the bushing (Figure 21 item 1) into the hub (item 2) and make the holes coincide as shown in Figure 21. Use witness marks as a guide. Oil set-screws lightly and screw in (item 3) - do not tighten yet.
8. Push the impeller with bushing (item 1) onto the shaft without loading it (using a hoist if the impeller weight requires it), align the axial position and tighten the set-screws (item 3) symmetrically. For HHA sizes 04 through 25,


**Figure 18**

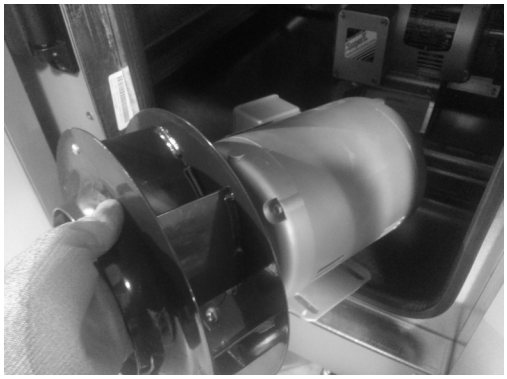

**Figure 19**

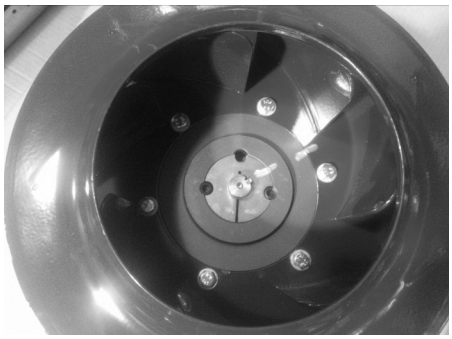

**Figure 20**

tighten set screws to 14.5 ft-lb. Fill empty holes with grease, to prevent the penetration of foreign bodies.

9. **IMPORTANT:** Dynamically balance the motor/wheel assembly to requirements of standard ISO 1940-1. **Failure to follow this step will void the motor/blower portion of the factory warranty.**
10. Re-install motor/wheel assembly. Align with inlet ring. Check impeller to inlet ring clearance.
11. Reconnect motor wires at motor terminals. Insure that motor wires are anchored at factory anchor points.
12. Close unit access doors, remove lockout/tagout and operate VFD at low speed. Turn off VFD after 1 minute. Carefully open the blower access door to confirm that rotation is correct. **DANGER! DO NOT REACH INTO FAN COMPARTMENT—ROTATING EQUIPMENT!** If rotation is correct, proceed to next step. If rotation is incorrect, make sure the correct motor terminals were used and correct the rotation.
13. Operate unit. After approximately 1 hour of running time, lock out and tag out the power supply and allow the fan to stop rotating.
14. Without disconnecting motor wiring, remove motor/blower assembly, rotate it so that the inlet is accessible, and check the tightening torque of the screws for the value required in step above. Re-install motor/wheel assembly. Align with inlet ring. Check impeller to inlet ring clearance.
15. DANGER-CLOSE ACCESS DOORS FIRST! Use an accelerometer with remote display so access doors can be closed while fan is running. Check for vibration at motor mount plate: acceptable level is 2.8mm/s or less at max RPM as allowed by the VFD. Measure on the motor housing at impeller side motor bearing.

**Fan System Periodic Maintenance**

1. Magic Aire strongly recommends use of a Preventive Maintenance program to insure that the unit operates safely and efficiently.
2. Motor bearings are permanently sealed and do not require lubrication. Note that fan motor bearings may be replaced if required by following motor manufacturer's instructions.
3. Check the fan for mechanical oscillations in accordance with ISO 14694. Recommendation: every six months. Vibration should not exceed specification in section "fan motor replacement".
4. Deposits of dust or other debris on the impeller can cause vibration and premature failure. Follow cleaning instructions in section "Fan Maintenance & Cleaning".

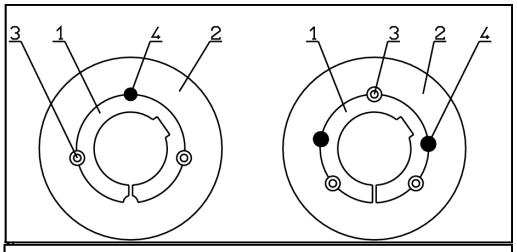


**Figure 21**
**Hub & Bushing Screw Detail**

| Item no. | Description |
|---|---|
| 1 | Bushing |
| 2 | Taper lock hub |
| 3 | Set screw in tightening hole |
| 4 | Removal hole |

**Fan Maintenance & Cleaning**

1. Regular inspection, and cleaning is necessary to prevent imbalance due to ingress of dirt.
2. Clean the fan's flow area - maintenance interval in accordance with the degree of contamination. **Verify vibration free motion**.
3. The fan wheel can be cleaned with a moist cloth.
4. Do not use any aggressive, paint solvent cleaning agents when cleaning.
5. Never use a high-pressure cleaner or water-spray for cleaning - particularly when the fan is running.
6. If water enters the motor:
   A. Dry off the motor winding before using it again.
   B. Replace motor bearings in accordance with motor manufacturer's instructions.
   C. **WARNING! Wet cleaning under voltage may lead to electric shock and serious injury or death!**

**Coil Cleaning**

DETERGENT — Spray mild detergent solution on coils with garden-type sprayer. Rinse with fresh water. Check to ensure condensate line is free. Excess water from cleaning may flood unit if condensate line is plugged.

**Winter Shutdown (Chilled Water Coil Only)**

ANTIFREEZE METHODS OF COIL PROTECTION

1. Close coil water supply and return valves.
2. Drain coil as follows:
   *Method I* — 'Break' flange of coupling at each header location. Separate flange or coupling connection to facilitate coil drain-

ing.

*Method II* — Open both valves to auxiliary drain piping.

3. After coil is drained:

*Method I* — Connect line with a service valve and union from upper connection to an antifreeze reservoir. Connect a self-priming reversible pump between the low header connection and the reservoir.

*Method II* — Make connection to auxiliary drain valves.

4. Fill reservoir with any inhibited antifreeze acceptable to code and underwriter authority.
5. Open service valve and circulate solution for 15 minutes; then check its strength.
6. If solution is too weak, add more antifreeze until desired strength is reached, then circulate solution through coil for 15 minutes or until concentration is satisfactory.
7. Remove upper line from reservoir to reversible pump. Drain coil to reservoir and then close service valve.
8. Break union and remove reservoir and its lines.
9. Leave coil flanges or coupling open and auxiliary drain valves open until spring.

AIR DRYING METHOD OF COIL PROTECTION (Unit and coil must be level for this method.)

1. Close coil water supply and return main valves.
2. Drain coil as described in procedures for Antifreeze Methods of Coil Protection.
3. Connect air supply or air blower to inlet header connection and close its drain connection.
4. Circulate air and check for air dryness by holding mirror in front of open vent in outlet header drain connection. Mirror will fog if water is still present.
5. Allow coil to stand for a few minutes; repeat Step 4 until coil is dry.

PIPING — Direct expansion, chilled water, and hot water coils should always be piped for counterflow. (Fluid should enter the coil at the leaving-air side.) Steam coils must have the condensate connection at bottom of coil.

To determine intervals for cleaning coils in contaminated air operations, pressure taps should be installed across the coils and checked periodically. Abnormal air pressure drop will indicate a need for cleaning the coils.

**Steam Systems**

Annual steam system maintenance should include:

1. Clean the line strainers.
2. Blow down the dirt leg.
3. Clean and check operation of steam traps.
4. Check operation of control valves.
5. Check the operation of check valves to prevent condensate flowback.
6. Check operation of thermostatic air vents, if used. A float and thermostatic trap will contain a thermostatic air vent. When the bellows is ruptured, it will fail closed.
7. Check operation of vacuum breakers.
8. Check operation of the thermal protection devices used for freeze-up protection.
9. Steam or condensate should not be allowed to remain in the coil during the off season. This will prevent the formation and build up of acids.

There are additional precautions and control strategies, as found in various catalogues and in the ASHRAE Fundamentals Handbook when the entering-air temperature to the coil falls below 35 F. These conditions occur when IDT coils are used for pre-heat and/or face and bypass applications.

Freeze up protection:

1. Use a strainer in the supply line and the dirt leg ahead of the trap.
2. Use a vacuum breaker in the return.
3. Do not use overhead returns from the coil. A floodback can occur.
4. An immersion thermostat to control outdoor-air dampers and the fan motor is recommended. This control is activated when the steam supply fails or the condensate temperature drops below a predetermined temperature, usually 120 F.
5. On low pressure and vacuum systems, the immersion thermostat may be replaced by a condensate drain with a thermal element. This element opens and drains the coil when the condensate temperature drops below 165 F. Note the thermal condensate drain is limited to 5 psig pressure. At greater coil pressures they will not open.

In spite of the precautions listed above, a coil may still freeze up. An oversize capacity coil, at partial load, with a modulating steam control valve will occasionally freeze. Freezing occurs in the 20 F to 35 F range of entering-air temperatures. A better installation would be an undersize coil, with an on/off control valve with thermostatic control in the outside air, set at 35 F air temperature, installed downstream of the first coil; or setting the minimum steam pressure at 5 psig.

**Filters**

FILTER SECTIONS — Open or remove filter panel to replace old filter with a new filter. See physical data tables for filter data.

**SERVICE-Coil Removal and Reinstallation Procedure**

1. Perform procedure on the ground for safety. If working at heights USE EXTREME CAUTION observe all FALL SAFETY considerations. Under all conditions, LOCK OUT all power supplies before performing this procedure. WARNING! Coil section can be heavy depending on coil combination—use proper lifting equipment.
2. Isolate and drain coil from heating/cooling fluid and/or reclaim refrigerant. Disconnect unit from piping. Remove supply piping to allow access into the coil section from the side. Remove coil section outer access panel (See figures 22 to 28 for instructions). Note that there is another coil access panel on the opposite side of the unit, both access panels should be removed in order to take out the coils from the unit.
3. Slide coil section out of the unit. (A minimum of two people is necessary to remove the coil from the air handler, one pulling from the coil connections side and the other pushing from the opposite side) (See figures 29 and 30 for instructions).
4. Replace coil(s) in coil module. (See figures 31 to 37 for instructions).
5. Slide coil section back in place and reinstall inner access panel and insulation. Add sealing tape around edges of inner panel.
6. Reinstall outer access panel.
7. Install coil section access panel.
8. Restore unit to service.

**Remove all fasteners indicated on the image in order to detach the first panel**

**Figure 22**

**Remove all fasteners indicated to detach the second panel**

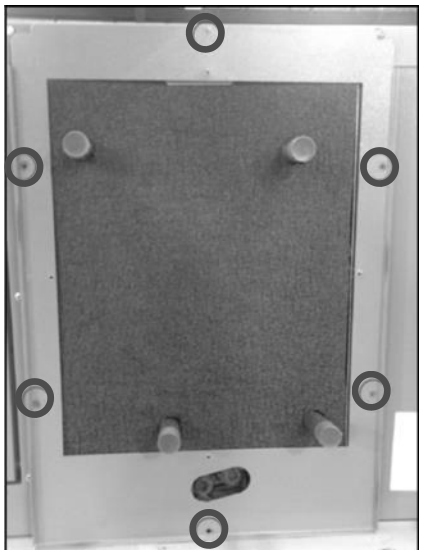

**Figure 23**

**Carefully slide out the insulation from the coil**

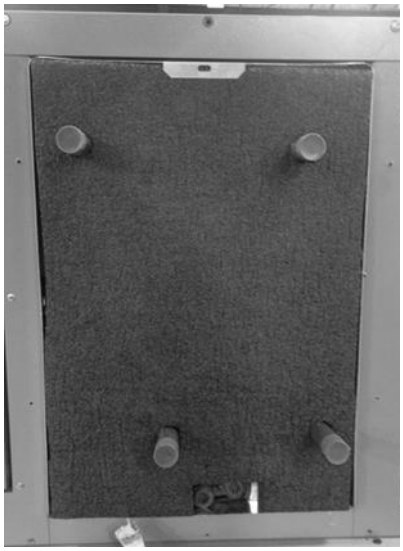

**Figure 24**

**Remove all fasteners indicated on the image**

**Figure 25**

**Remove all fasteners indicated on the image**

**Figure 26**

**Pull out the insulation**

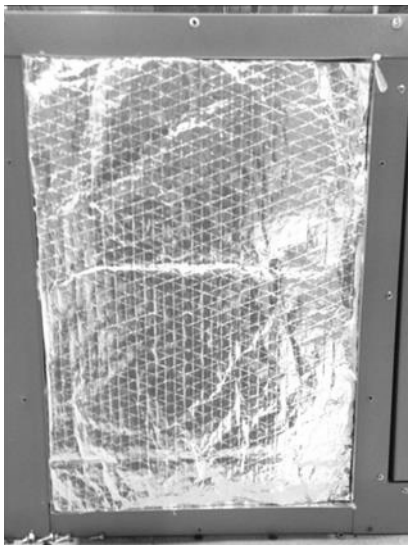

**Figure 27**

**Remove all fasteners indicated on the image**

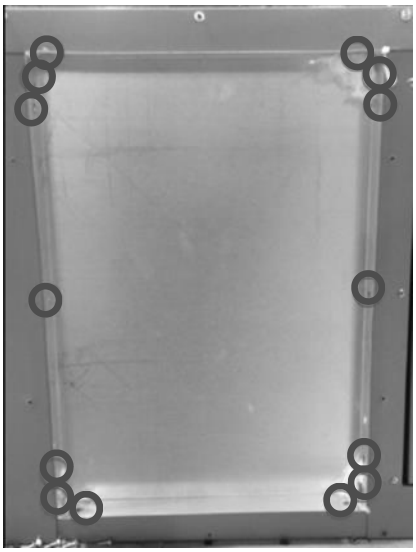

**Figure 28**

**Push coil from this end (If necessary, carefully remove insulation)**

**Figure 29**

**Pull coil from opposite side (Do not pull by the coil connection tubes)**


**Figure 30**

**Remove the fasteners indicated on the image from all four corners**

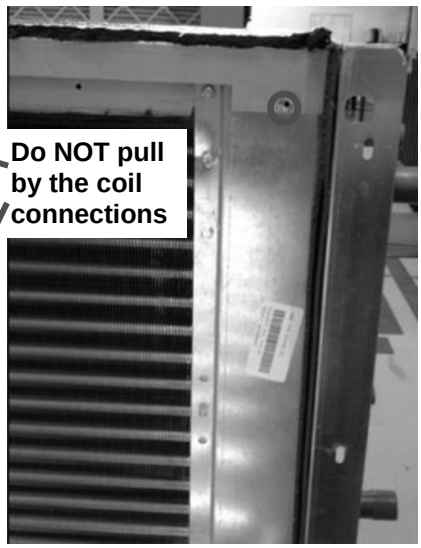

**Figure 31**

**Remove all fasteners indicated on the image from both end plates**

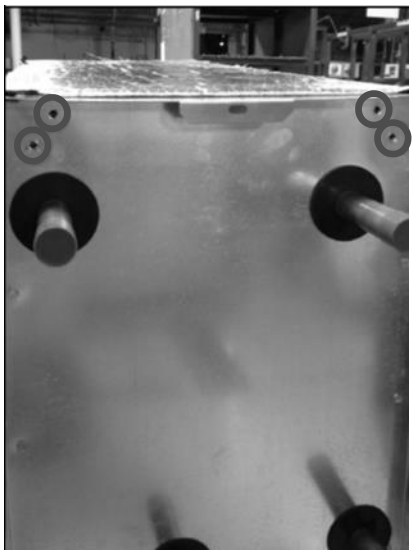

**Figure 32**

**Remove the remaining fasteners left on the corners**

**Figure 33**

**Displace the top of the module**

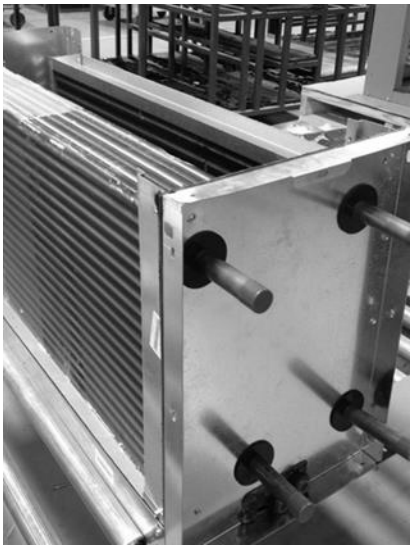

**Figure 34**

**Remove the fasteners indicated on both end plates and pull out the plates**

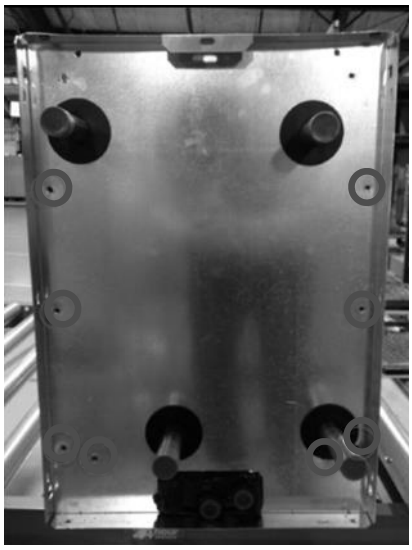

**Figure 35**

**Remove all fasteners indicated on the image from all the corners**

**Figure 36**

**Pull out the  corners. At this point the coils can be removed from the module**

**Figure 37**

**DANGER**

NEVER enter an enclosed fan cabinet or reach into a unit while the fan is running.
LOCK OPEN AND TAG the fan motor power disconnect switch before working on a fan. Take fuses with you and note removal on tag. Electric shock can cause personal injury or death.
Failure to follow these warnings could lead to personal injury or death.

**DANGER**

**VFD Energy Stored!**
Dangerous voltage is present when input power is connected. After disconnecting power supply wait at least 5 minutes before performing any maintenance.

**WARNING!** Changing certain parameters can lead to improper motor operation, such as operation at current higher than the allowable maximum. DO NOT CHANGE the following settings without written factory approval:

- -max output frequency
- -max motor current
- -motor direction
- -min frequency
- -motor nominal current
- -motor nominal speed

## General

HHA product has several control options. For all options, the VFD can be put into manual mode from the keypad. Other control options allow for field-supplied fan speed signal and for keypad control (manual speed setting). VFD's are located inside the blower compartment. Keypad is mounted on unit exterior for all control options.

## Reset VFD to Factory Settings:

To reset VFD parameters to the factory settings:

1. Move jumper S1 (see Fig. 38) settings on VFD to match factory wiring diagram,
2. Change parameter 9902 to "HVAC default" to reset all the parameters,
3. Set all parameters to values indicated in Table 3 or Table 4.

## Modify VFD Factory Settings:

To modify certain VFD parameters, select those parameters and modify as needed. To change parameters:

a. Press <Menu>
b. Select Parameters
c. Press <Enter>
d. Select sub-group (first two digits of the parameters)
e. Press <SEL>
f. Select parameter
g. Press <EDIT>
h. Select the new value
i. Press <SAVE>
j. Select any other parameters of the group to change and go to "g." above.
k. When complete, press <Exit>
l. Select any other parameter groups to change and go to "e." above.
m. When complete, Press <Exit>.
n. Press <Exit> until the status menu is visible (HZ, PSI, PSI)

**Figure 38-VFD Jumper S1 Location and Terminal Details**

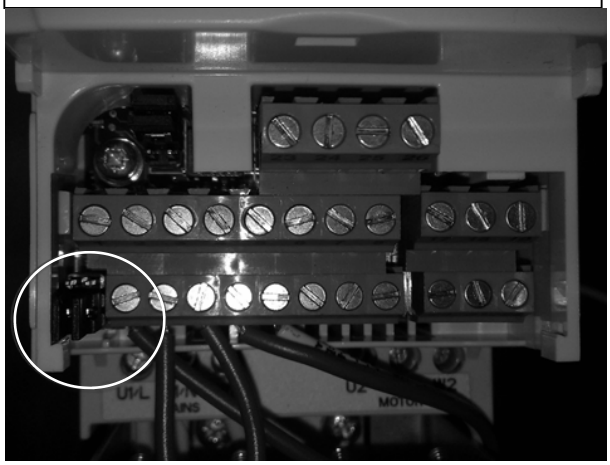

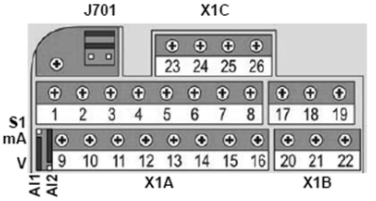


**J701:** Connects 120 ohm termination resistor. See page 51.
**S1:** Selects voltage or current as the signal types for analog inputs AI1 and AI2.

**X1A:**
1: SCR
2: AI1
3: GND
4: +10 V
5: AI2
6: GND
7: AO
8: GND
9: +24 V
10: GND
11: DCOM
12: DI1
13: DI2
14: DI3
15: DI4
16: DI5 digital or frequency input

**X1B:**
17: ROCOM
18: RONC
19: RONO
20: DOSRC
21: DOOUT
22: DOGND

**X1C:**
23: SCR
24: B
25: A
26: GND_A

## NOTES:

1. Refer to electrical installation section for conversion from 4-20mA fan speed control to 0-10VDC.
2. For assistance with VFD setup for special applications or detailed troubleshooting, contact VFD manufacturer service: ABB Inc. Automation Technologies Drives & Motors, 1-800-HELP-365 OR Mitsubishi Technical Assistance Center 1-800-950-7781.

## Table 3—VFD Parameters—Control (digit 17) Option A, B, C (Keypad or 4-20mA control signal)

| Control Option | | Parameter Index | Parameter Function | Setting |
|---|---|---|---|---|
| A | B/C | | | |
| X | X | 1611 (ACS310-320) | Parameter View | 3 (Long View) |
| X | X | n/a (ACS55 ONLY) | Parameter View – Menu PAr S/ PAr L | PAr L (Long View) |
| X | X | 1001 | Start/Stop Command | 1 (DI1) |
| X | X | 1003 | Motor Direction | 1 (Forward) |
| X | X | 1104 | Min Frequency | 10 Hz |
| X | X | 1105 | Max Ref Frequency | See Table 5 |
| X | X | 1109 (ACS55 ONLY) | Local Reference Source | 1 (Keypad) |
| X | X | 1201 | Constant Speed Selection | 0 (No Constant Speed) |
| | X | 1301 (POTENT. ONLY) | Minimum AI1 | 0% |
| X | | 1301 (4-20 mA ONLY) | Minimum AI1 | 20% |
| X | X | 1601 | Run Enable | 1 (DI1) |
| X | X | 1608 | Start Enable | 1 (DI1) |
| X | X | 1610 | Display Alarms | 1 (Yes) |
| X | X | 2003 | Max Motor Current | See Table 5 |
| X | X | 2008 | Maximum Output drive frequen-cy | See Table 5 |
| X | X | 2606 | Switching Frequency | 16 kHz |
| X | X | 9905 | Motor Nom Voltage | 115 (for 115V) or 230 (for 208-230V) or 460 (for 460V) |
| X | X | 9906 | Motor Nominal Current | See Table 5 |
| X | X | 9908 | Motor Nominal Speed | 3500 |

**NOTES:**

1. Control Option "A" indicates factory settings for VFD ready for 4-20mA proportional fan speed signal. Fan speed control is automatic by field-provided 4-20mA signal.
2. Control Option "B" indicates factory settings for VFD with exterior mounted keypad. Fan speed control is manual and controlled at the keypad.
3. Control Option "C" indicates factory settings for VFD with potentiometer (dial). Fan speed control is manual and is set at the potentiometer.

**Table 4—VFD Parameters—Control (digit 17) Option D (Constant CFM control)**

| Parameter Index | Parameter Function | Setting |
|---|---|---|
| 1611 | Parameter View | 3 (Long View) |
| 9902 | Application Macro | 1 (HVAC Default) |
| 9905 | Motor Nom Voltage | 230 or 460 (see Nameplate) |
| 9906 | Motor Nominal Current | See Table 5 |
| 9908 | Motor Nominal Speed | 3500 |
| 1001 | Start/Stop Command | 1 (DI1) |
| 1002 | EXT 2 Comands | 1 (DI1) |
| 1003 | Motor Direction | 1 (Forward) |
| 1102 | EXT 1 - EXT 2 SEL | EXT 2 |
| 1104 | Min Frequency | 10 Hz |
| 1105 | Max Ref Frequency | See Table 5 |
| 1103 | REF1 Select | 2(AI2) |
| 1106 | REF2 Select | 19(PID1Out) |
| 1201 | Constant Speed Selection | 0 (No Constant Speed) |
| 1301 | AI-1 Minimum | 0.2 |
| 1302 | AI-1 Maximum | 1 |
| 1601 | run enable | 1 (DI1) |
| 1608 | Start Enable | 1 (DI1) |
| 1609 | Start Enable 2 | 1 (DI1) |
| 1610 | Display Alarms | 1 (Yes) |
| 2003 | Max Motor Current | See Table 5 |
| 2008 | Maximum Output drive frequen-cy | See Table 5 |
| 2202 | Acceleration Time | 5s |
| 2203 | Decel Time | 5s |
| 2606 | Switching Frequency | 16 kHz |
| 3404 | OUTPUT 1 DISPLAY FORM | 9 (Direct) |
| 3408 | SIGNAL 2 PARAM | 130 (PID 1 FBK) |
| 3411 | OUTPUT 2 DSP FORM | 6 (2 DEC) |
| 3412 | OUTPUT 2 DSP UNIT | 58 (in H20) |
| 3415 | OUTPUT 3 PARAMETER | 0128 (PID SETPOINT) |
| 3418 | OUTPUT 3 DISPLAY FORM | 6 (2 DEC) |
| 3419 | OUTPUT 3 UNITS | 58 (in H20) |
| 4001 | PID GAIN | 0.7 |

**Table 4—VFD Parameters—Control (digit 17) Option D (Constant CFM control)**

| Parameter Index | Parameter Function | Setting |
|---|---|---|
| (CONT'D FROM ABOVE) | | |
| 4002 | PID INTEGRATE | 5 s |
| 4005 | ERROR VALUE INVERTED | 0 (No) |
| 4006 | UNITS | 58 (in H20) |
| 4007 | UNIT SCALE | 2 (2 DEC) |
| 4008 | 0% VALUE | 0.0 (in H20) |
| 4009 | 100 % VALUE | 25.0 (in H20) |
| 4010 | SET POINT SELECT | 19 (INTERNAL) |
| 4011 | SET POINT | See Table 6a or 6b |
| 4014 | Feedback Select | 1 (ACT1) |
| 4016 | ACT-1 Input | 2(AI2) |

**NOTES:**
Control Option "D" indicates factory settings for VFD with constant CFM (airflow) control. VFD speed is controlled using the differential pressure output from the differential pressure transducer. The VFD changes RPM to keep the DP setpoint constant, which results in constant airflow.

**Table 5—VFD Parameters—All Control Options**

| UNIT | HP | PARAMETER 115/1/60 FLA | 2003 / 9906 208-230 FLA | 2003 / 9906 460V FLA | 1105 / 2008 MAX FREQ |
|---|---|---|---|---|---|
| HHA08/12 | 1 | 3.75 | 3.75 | 1.81 | 76 |
| | 1.5 | | 4.83 | 2.30 | 85 |
| HHA16/20/25 | 2.0 | | 6.44 | 2.88 | 55 |
| | 3.0 | | 8.74 | 4.37 | 59 |
| | 5.0 | | 14.6 | 6.90 | 76 |

## Constant CFM Control Option

With the constant CFM option the pressure transducer measures differential pressure (DP, units of in w.g.) across the fan inlet "nozzle". The DP signal goes to the VFD which has the control logic, and the controls change fan RPM to try to maintain the DP setpoint. As the filters load up, the airflow drops and the control loop speeds up the fan to compensate, keeping the DP (and therefore CFM) the same. Below is the procedure for changing the DP setpoint. Tables 6a and 6b show airflow and corresponding DP settings to choose from. Note that the VFD will limit the max RPM and motor current to protect the motor and drive, so some of these settings won't be possible with all static pressures.

To change constant CFM setpoint: change VFD parameter 4011 to the value in the table that corresponds to the desired CFM. Interpolate as needed to reach CFM values between the table values.

For example: To operate HHA20 at 2040cfm, go to the HHA16-25 table (Table 6b), locate 2040cfm, read DP Set Point of 7.0 inches w.g. (first column), so 7.0 will be the setting for parameter 4011.

**Table 6a and 6b**
**Constant CFM Differential Pressure (DP) Set Points**

**Table 6a**
**HHA04 through HHA12**

| DP SET POINT (inches w.g.) Parameter 4011 | CFM |
|---|---|
| 0.5 | 353 |
| 1.0 | 433 |
| 1.5 | 521 |
| 2.0 | 560 |
| 2.5 | 614 |
| 3.0 | 694 |
| 3.5 | 752 |
| 4.0 | 793 |
| 4.5 | 832 |
| 5.0 | 869 |
| 5.5 | 916 |
| 6.0 | 950 |
| 6.5 | 983 |
| 7.0 | 1015 |
| 7.5 | 1045 |
| 8.0 | 1075 |
| 8.5 | 1104 |
| 9.0 | 1132 |
| 9.5 | 1169 |
| 10.0 | 1205 |
| 10.5 | 1239 |
| 11.0 | 1264 |
| 11.5 | 1305 |

**Table 6b**
**HHA16 through HHA25**

| DP SET POINT (inches w.g.) Parameter 4011 | CFM |
|---|---|
| 2.0 | 1095 |
| 2.5 | 1222 |
| 3.0 | 1372 |
| 3.5 | 1475 |
| 4.0 | 1561 |
| 4.5 | 1662 |
| 5.0 | 1775 |
| 5.5 | 1838 |
| 6.0 | 1916 |
| 6.5 | 1975 |
| 7.0 | 2040 |
| 7.5 | 2223 |
| 8.0 | 2288 |
| 8.5 | 2352 |
| 9.0 | 2406 |
| 9.5 | 2567 |
| 10.0 | 2641 |
| 10.5 | 2701 |
| 11.0 | 2748 |
| 11.5 | 2805 |

# Magic Aire Water Quality Guidelines

**For Heat Exchanger Coils with Copper Tubes**

**Introduction:**

Poor cooling/heating water quality can cause serious problems. Ground source or open loop water quality varies and therefore should be tested to determine suitability for use with Magic Aire equipment. Test water for hardness, acidity and iron content before the equipment is installed. Poor water quality can cause one or more of the following problems: mineral deposits, sediment deposits or corrosion. These problems will result in fouling, contamination or damage to water coils and may render them inoperable or inefficient. It is the responsibility of the customer to insure that the water quality meets or exceeds water quality specifications prescribed in Table 1.

**Table 1**

| Condition | Acceptable Level | |
|---|---|---|
| pH | 7 to 9 | |
| Total Hardness | Calcium and magnesium carbonate should not exceed 20 grains per gallon (350 ppm). | |
| Iron Oxides | < 1 ppm. | |
| Iron Bacteria | No level allowable. | |
| Brackish | Calcium or sodium chloride concentrations ≤ 125 ppm. (Seawater is approximately 25,000 ppm) | |
| Sediment/Solids | Provide ≤ 800 micron filtration on open loop or ground source systems. | |
| Corrosion[1] | Ammonia, Ammonium Hydroxide | 0.5 ppm max. |
| | Ammonium Chloride, Ammonium Nitrate | 0.5 ppm max. |
| | Ammonium Sulfate | 0.5 ppm max. |
| | Chlorine/Chlorides | 0.5 ppm max. |
| | Hydrogen Sulfide[2] | None Allowable |

**NOTES:**

1. If the concentration of these corrosives exceeds the maximum allowable level, then the potential for serious corrosion problems exists.

2. Sulfides in the water quickly oxidize when exposed to air, requiring that no agitation occur as the sample is taken. Unless tested immediately at the site, the sample will require stabilization with a few drops of one Molar zinc acetate solution, allowing accurate sulfide determination up to 24 hours after sampling. A low pH and high alkalinity cause system problems, even when both values are within ranges shown. The term pH refers to the acidity, basicity, or neutrality of the water supply. Below 7.0, the water is considered to be acidic. Above 7.0, water is considered to be basic. Neutral water contains a pH of 7.0.

3. To convert ppm to grains per gallon, divide by 17. Hardness in mg/l is equivalent to ppm.

# PHYSICAL DATA

| Model HH | | Unit Size 04 | 06 | 08 | 12 | 16 | 20 | 25 |
|---|---|---|---|---|---|---|---|---|
| Nominal Capacity (Tons) | | 1 | 1.5 | 2 | 3 | 4 | 5 | 6.25 |
| Nominal Capacity (BTU/HR) | | 12000 | 18000 | 24000 | 36000 | 48000 | 60000 | 75000 |
| Nominal Airflow (CFM) | | 400 | 600 | 800 | 1200 | 1600 | 2000 | 2500 |
| Fan | | | | | | | | |
| Fan Size | | 9" Plenum Fan | | | | 12.5" Plenum Fan | | |
| Filter | | | | | | | | |
| Quantity / Actual size (in) | 2" Pleated (MERV 8) | 12H x 29L | | 12H x 35L | | 18H x 44L | | |
| | 4" Pleated (MERV 13) | 12H x 29L | | 12H x 35L | | 18H x 44L | | |
| | 12" HEPA Type A, 99.975% on 0.3µm, Class 1 | 12.5H x 25L x 11.5D | | 12.5H x 31L x 11.5D | | 18.5H x 40L x 11.5D | | |
| Coil Face Area | | | | | | | | |
| Face Area-Hydronic (sq ft.) | 1- Row | 1.58 | 1.79 | 1.50 | 2.39 | 4.03 | 5.00 | - |
| | 2- Row | 1.58 | 1.79 | 1.56 | 2.39 | 3.52 | 4.38 | 5.55 |
| | 4- Row | 1.58 | 1.79 | 2.00 | 3.06 | 4.03 | 5.00 | 6.23 |
| | 6- Row | 1.58 | 1.79 | 2.00 | 3.06 | 3.94 | 5.00 | 6.23 |
| Face Area-DX (sq ft.) | | 1.19 | 1.79 | 2.00 | 3.06 | 4.03 | 5.00 | 6.08 |
| Coil Rows/FPI | | | | | | | | |
| Chilled Water/2-Pipe - 4 row | | 4/10 | 4/10 | 4/10 | 4/10 | 4/10 | 4/10 | 4/10 |
| Chilled Water/2-Pipe - 6 row | | 6/10 | 6/10 | 6/10 | 6/10 | 6/10 | 6/10 | 6/10 |
| Std Capacity Steam | (See Note 1) | 2/8 | 2/8 | 2/6 | 2/6 | 2/6 | 2/6 | 2/6 |
| High Capacity Steam | (See Note 1) | - | - | 2/14 | 2/14 | 2/14 | 2/14 | 2/14 |
| Std Capacity DX | | 3/10 | 3/10 | 3/12 | 3/10 | 3/12 | 3/12 | 3/12 |
| High Capacity DX | | 6/10 | 6/10 | 6/10 | 6/10 | 6/10 | 6/10 | 6/10 |
| Max Coil Rows | | 12 Rows Total (note 1) | | | | | | |
| Coil Connections (in) | | | | | | | | |
| Chilled Water (OD Copper Tube) | 4-Row | 0.75 | 0.75 | 0.75 | 0.875 | 0.875 | 1.125 | 1.125 |
| | 6-Row | | | | | 1.125 | | 1.375 |
| Hot Water (OD Copper Tube) | | 0.75 | 0.625 | 0.625 | 0.625 | 0.875 | 0.875 | 1.125 |
| Steam-Std Cap-Supply/Return (MPT) | | 1.50/1.00 | 1.50/1.00 | 1.50/1.00 | 1.50/1.00 | 1.50/1.00 | 1.50/1.00 | 1.50/1.00 |
| Steam-High Cap-Supply/Return (MPT) | | - | - | 1.50/1.00 | 1.50/1.00 | 1.50/1.00 | 1.50/1.00 | 1.50/1.00 |
| Std Cap DX | Liquid (OD Sweat) | 0.375 | 0.375 | 0.375 | 0.375 | 0.375 | 0.625 | 0.5 |
| | Suction (OD Sweat) | 0.625 | 0.625 | 0.75 | 0.75 | 0.75 | 1.125 | 0.875 |
| Std Cap DX (dual ckt) | Liquid (OD Sweat) 2ea | - | - | 0.375 | 0.375 | 0.375 | 0.375 | 0.5 |
| | Suction (OD Sweat) 2ea | - | - | 0.75 | 0.75 | 0.75 | 0.75 | 0.875 |
| High Cap DX | Liquid (OD Sweat) | 0.375 | 0.375 | 0.375 | 0.5 | 0.625 | 0.625 | 0.5 |
| | Suction (OD Sweat) | 0.75 | 0.75 | 0.75 | 0.875 | 0.875 | 1.125 | 0.875 |
| High Cap DX (dual ckt) | Liquid (OD Sweat) 2ea | - | - | 0.375 | 0.375 | 0.5 | 0.5 | 0.5 |
| | Suction (OD Sweat) 2ea | - | - | 0.75 | 0.75 | 0.875 | 0.875 | 1.125 |
| Condensate Drain Line | | | | | | | | |
| Primary & Auxiliary | | 3/4" FPT | | | | | | |
| Coil Volume | | | | | | | | |
| Hot Water - 1 row (gal) | | 0.1 | 0.2 | 0.2 | 0.3 | 0.5 | 0.6 | - |
| Hot Water - 2 row (gal) | | 0.3 | 0.3 | 0.3 | 0.7 | 0.7 | 0.9 | 1.1 |
| Chilled Water/2-Pipe - 4 row (gal) | | 0.5 | 0.6 | 0.6 | 0.8 | 1.1 | 1.4 | 2.2 |
| Chilled Water/2-Pipe - 6 row (gal) | | 0.8 | 0.9 | 0.8 | 1.3 | 1.7 | 2.1 | 3.2 |
| Std Capacity DX | (cu in) (note 2) | 68 | 103 | 115 | 175 | 231 | 286 | 348 |
| High Capacity DX | (cu in) (note 2) | 136 | 205 | 229 | 350 | 461 | 573 | 697 |

**Notes:**

1. Steam coils are 1-row, 5/8" tube-in-tube steam distributing type construction. When calcuating total rows of coil for the unit, these count as 2 rows.
2. For dual circuit coils, volume is half of that listed, per circuit.

| CODE NO. / CATALOG NO. | MagicAire® | THIS DOCUMENT IS THE PROPERTY OF UNITED ELECTRIC CO. LP AND IS DELIVERED UPON THE EXPRESS CONDITION THAT THE CONTENTS WILL NOT BE DISCLOSED OR USED WITHOUT UNITED ELECTRIC CO. LP'S WRITTEN CONSENT. | SUBMISSION OF THESE DRAWINGS OR DOCUMENTS DOES NOT CONSITUTE PART PERFORMANCE OR ACCEPTANCE OF CONTRACT. | **HHA04-25 Unit Outline** RH-2" MERV 8, 4" MERV 13 PRE-FILTER ARRANGEMENT B | **HH** DESIGN A |
|---|---|---|---|---|---|

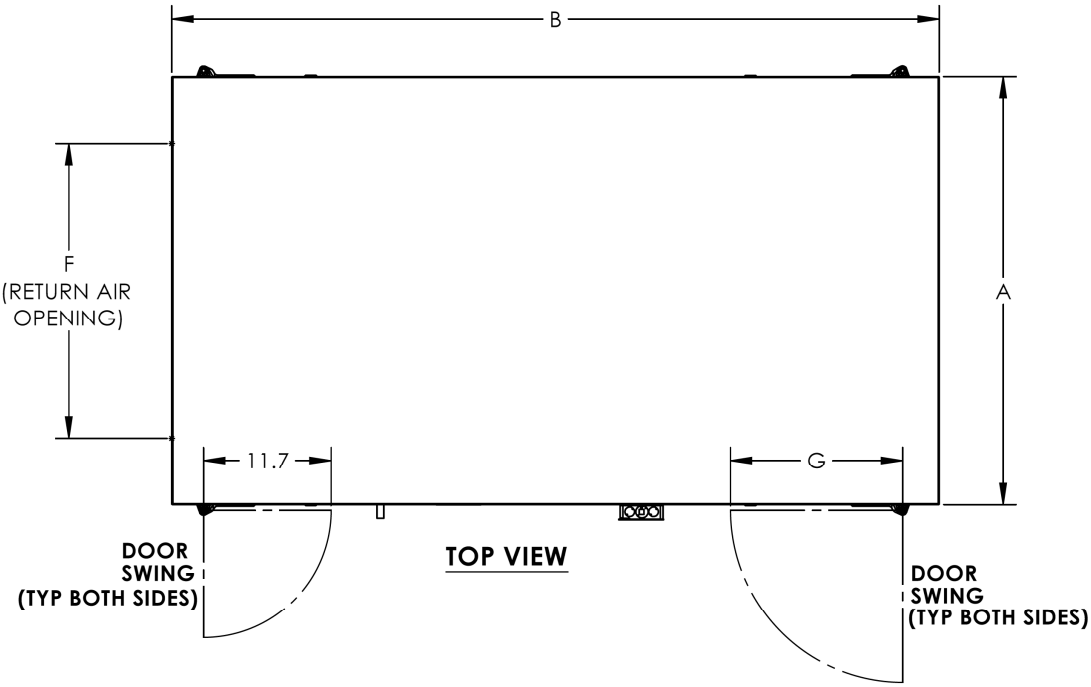


**TOP VIEW**

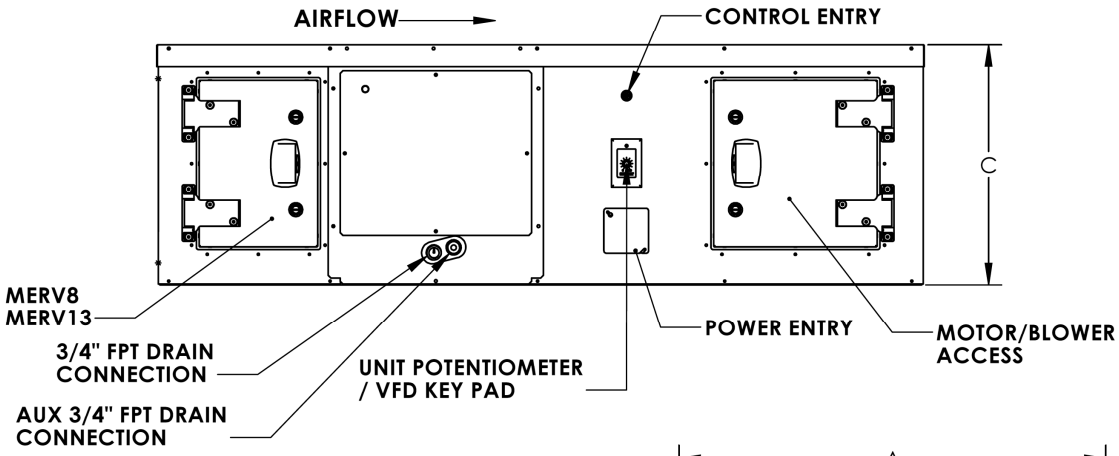


**RIGHT VIEW**

**NOTES:**

1. ALL DIMENSIONS ARE IN INCHES
2. UNIT POTENTIOMETER MAY BE RELOCATED BY OTHERS IN FIELD.
3. COIL CONNECTIONS SHOWN FOR REFERENCE ONLY.

| | A | B | C | D | E | F | G |
|---|---|---|---|---|---|---|---|
| HHA-04/06 | 33.2 | 70.4 | 22 | 17.8 | 18.1 | 21 | 15.8 |
| HHA-08/12 | 39.2 | 70.4 | 22 | 23.8 | 18.1 | 27 | 15.8 |
| HHA-16/20 | 48.2 | 74.4 | 28 | 32.8 | 24.1 | 36 | 19.8 |
| HHA-25 | 48.2 | 74.4 | 28 | 32.8 | 24.1 | 36 | 19.8 |

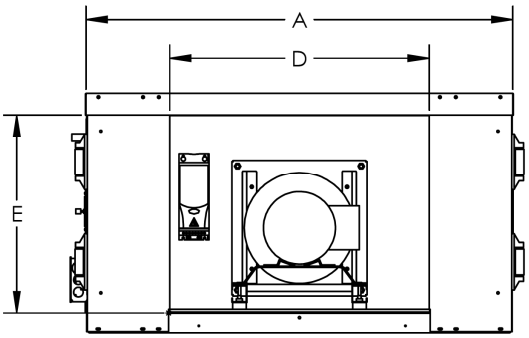


**FRONT VIEW**

PRODUCT INFORMATION IS SUBJECT TO CHANGE WITHOUT NOTICE

| JOB NAME | JOB # | BUYER | BUYER # | LOCATION | DRAWING NO. | REV |
|---|---|---|---|---|---|---|
| | | | | | **HHA-101** | B |

HHA-101.SLDDRW

| CODE NO. / CATALOG NO. | MagicAire® | THIS DOCUMENT IS THE PROPERTY OF UNITED ELECTRIC CO. LP AND IS DELIVERED UPON THE EXPRESS CONDITION THAT THE CONTENTS WILL NOT BE DISCLOSED OR USED WITHOUT UNITED ELECTRIC CO. LP'S WRITTEN CONSENT. | SUBMISSION OF THESE DRAWINGS OR DOCUMENTS DOES NOT CONSITUTE PART PERFORMANCE OR ACCEPTANCE OF CONTRACT. | **HHA04-25 Unit Outline** RH-2" MERV 8, 4" MERV 13 / HEPA ARRANGEMENT D | **HH** DESIGN A |
|---|---|---|---|---|---|

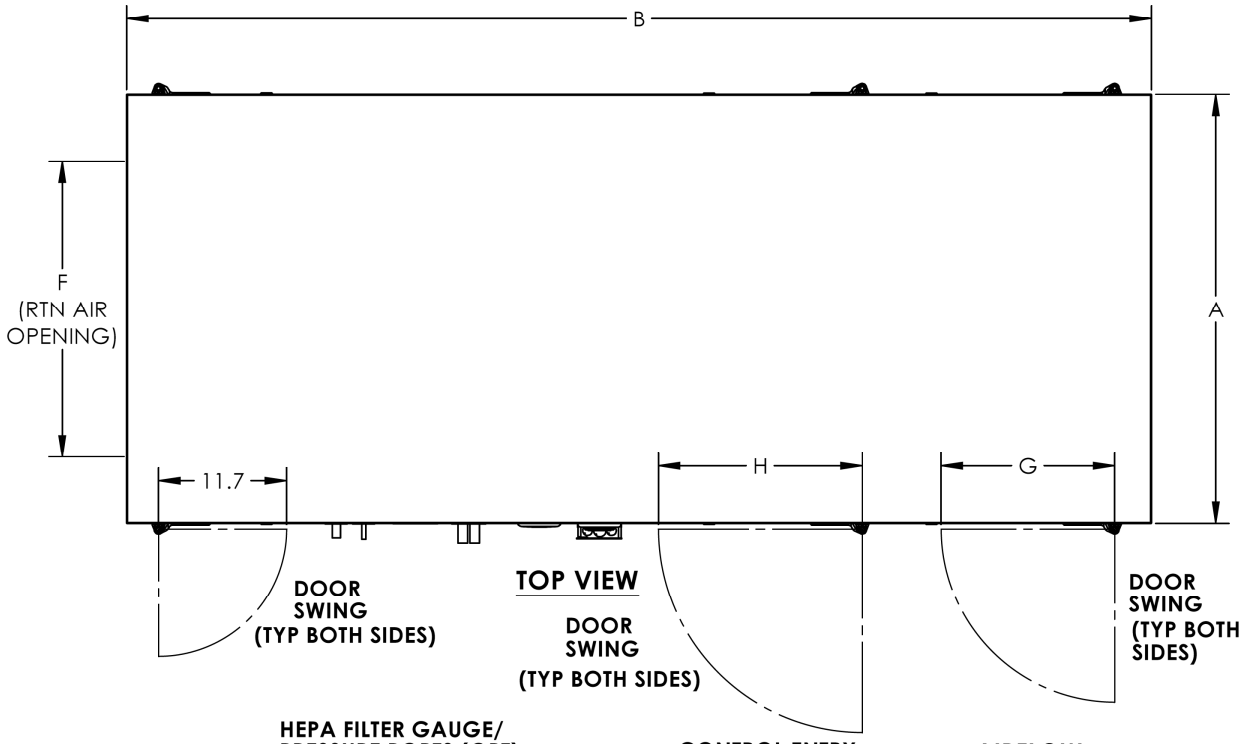


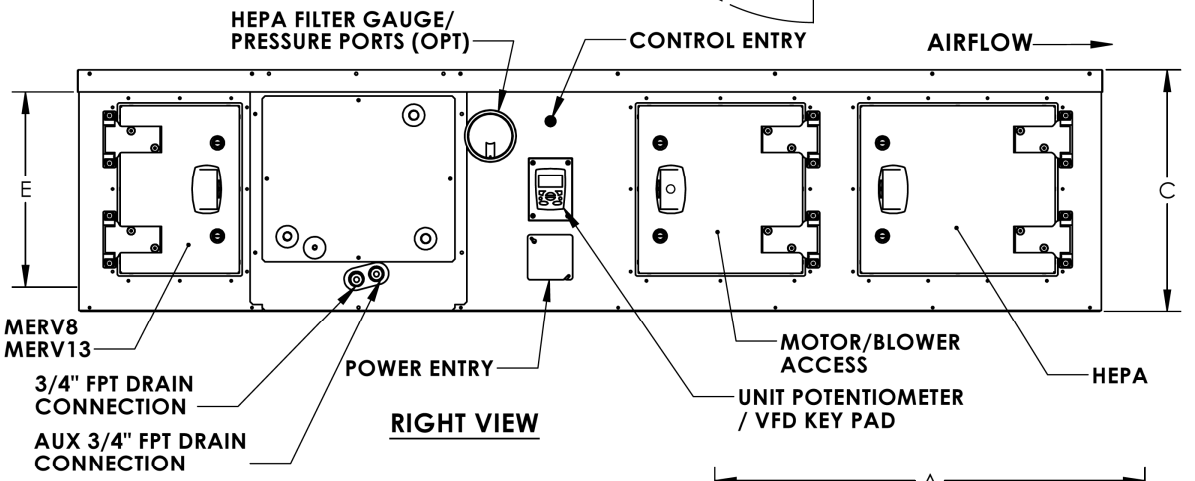


**NOTES:**

1. ALL DIMENSIONS ARE IN INCHES
2. UNIT POTENTIOMETER MAY BE RELOCATED BY OTHERS IN FIELD.
3. COIL CONNECTIONS SHOWN FOR REFERENCE ONLY.

| | A | B | C | D | E | F | G | H |
|---|---|---|---|---|---|---|---|---|
| HHA-04/06 | 33.2 | 93.4 | 22 | 17.8 | 18.1 | 21 | 15.8 | 18.5 |
| HHA-08/12 | 39.2 | 93.4 | 22 | 23.8 | 18.1 | 27 | 15.8 | 18.5 |
| HHA-16/20 | 48.2 | 97.5 | 28 | 32.8 | 24.1 | 36 | 19.8 | 18.6 |
| HHA-25 | 48.2 | 97.5 | 28 | 32.8 | 24.1 | 36 | 19.8 | 18.6 |

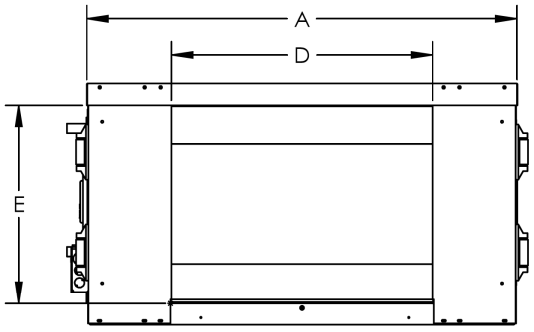


FRONT VIEW

PRODUCT INFORMATION IS SUBJECT TO CHANGE WITHOUT NOTICE

| JOB NAME | JOB # | BUYER | BUYER # | LOCATION | DRAWING NO. | REV |
|---|---|---|---|---|---|---|
| | | | | | HHA-102 | B |

# Model HHA
## Critical Environment Fan Coil
## HEPA Diffuser Accessory

## Louvered Face—4-way Directional

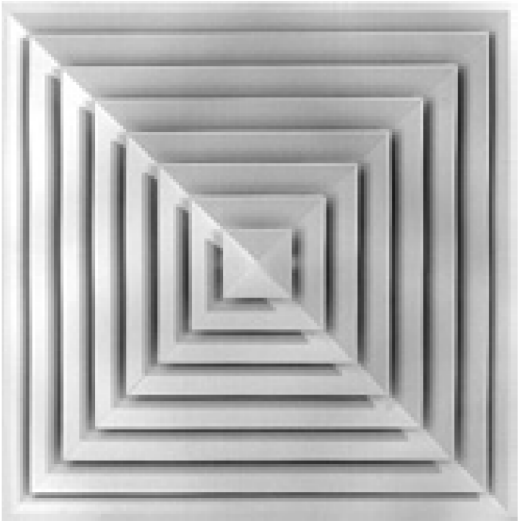

**Features:**

- 24” x 24” Nominal Ceiling Module size
- HEPA 99.99% at 0.3µm efficiency
- Room side replaceable filter media—does not disturb ceiling construction
- Gel type filter seal
- 4-way directional air distribution
- Delivers high air volumes
- 2” filter depth
- 10” diameter duct connection
- Steel butterfly damper with cable operator
- Static Pressure test port
- Factory PAO (polyalphaolefin) tested

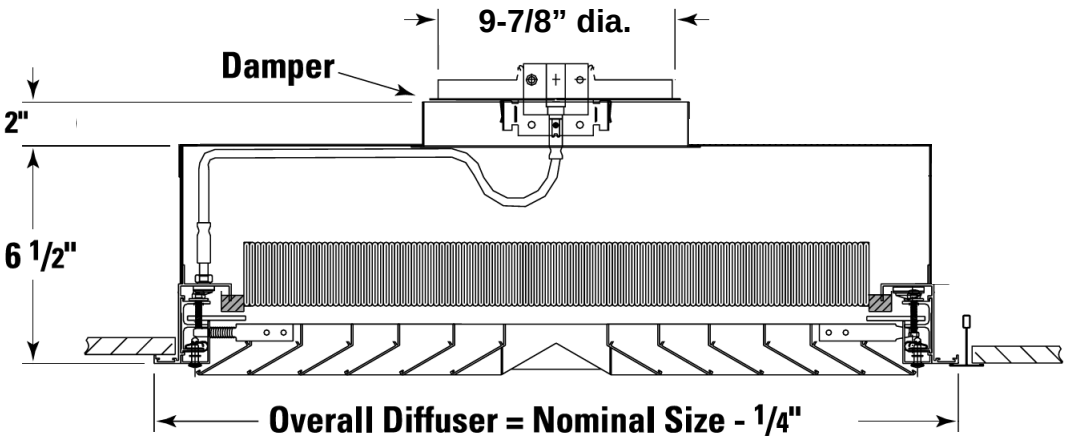

# Model HHA
## Critical Environment Fan Coil
## HEPA Diffuser Accessory

## Perforated Face—Laminar Flow

**Features:**

- 24” x 24” and 24” x 48” Nominal Ceiling Module sizes
- HEPA 99.99% at 0.3µm efficiency
- Room side replaceable filter media—does not disturb ceiling construction
- Gel type filter seal
- Laminar flow diffuser—unidirectional air-flow, low velocity for best clean room performance.
- 2” filter depth
- Round duct connection
  - 10” diameter for 24” x 24”
  - 12” diameter for 24” x 48”
- Steel butterfly damper with cable operator
- Static Pressure test port
- Factory PAO (polyalphaolefin) tested

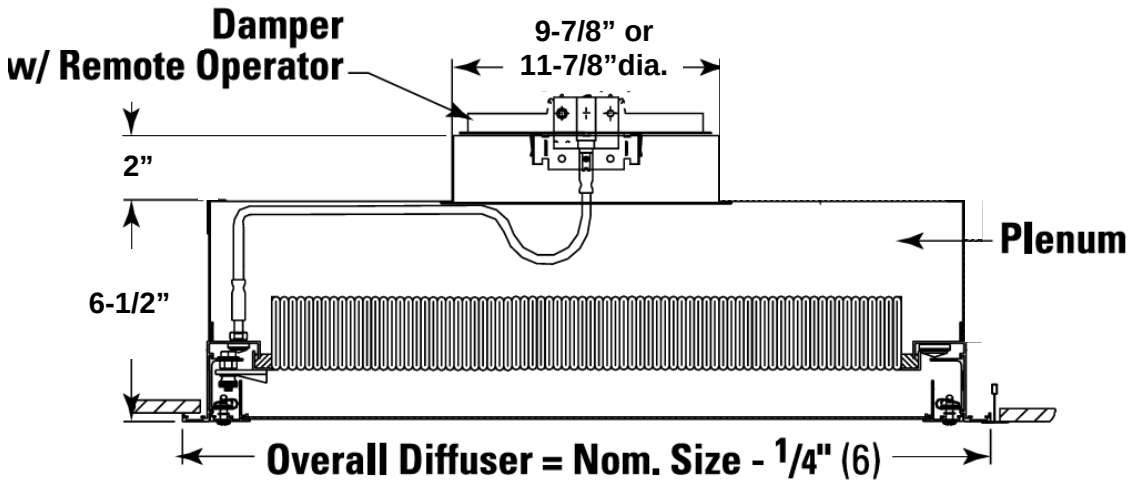

# Model HHA
## Critical Environment Fan Coil
## HEPA Diffuser Accessory

# Installation Instructions

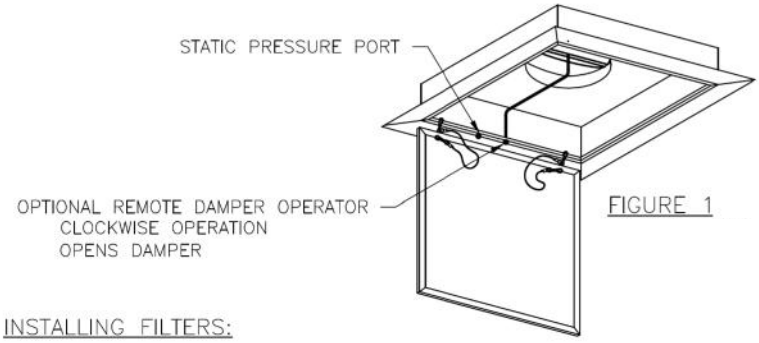


FIGURE 1

1. INSTALLING FILTERS:

TWO INSTALLERS ARE RECOMMENDED FOR PROPER INSTALLATION.
– AFTER DIFFUSER IS INSTALLED IN CEILING OPEN FACE PANEL (SEE FIGURE 1).
– PLACE ALL FILTER RETAINERS TO THE OPEN POSITION, LOOSEN THUMB NUTS IF NECESSARY (SEE FIGURE 2).
– TWO INSTALLERS LIFT THE FILTER SO THAT KNIFE EDGE CONTACTS CENTER OF GEL SEAL. PUSH FILTER FRAME STRAIGHT INTO KNIFE EDGE UNTIL IT BOTTOMS OUT.
– CLOSE ALL FILTER RETAINERS, THEN TIGHTEN REMAINING THUMB NUTS (SEE FIGURE 3).

2. ADJUSTING OPTIONAL DAMPER:

– FOR FACE ACCESSIBLE OPTION REMOVE PLUG AND TURN REMOTE DAMPER OPERATOR SCREW THROUGH FACE
– FOR STANDARD FACE USE 1/4 TURN FASTENERS TO REMOVE FACE AND TURN REMOTE DAMPER OPERATOR SCREW

3. STATIC PRESSURE PORT:

– USED TO MEASURE PRESSURE DROP ACROSS FILTER OR TO SAMPLE AEROSOL CONCENTRATIONS BEFORE FILTER WHEN TESTING FILTER FOR LEAKS.

FIGURE 2

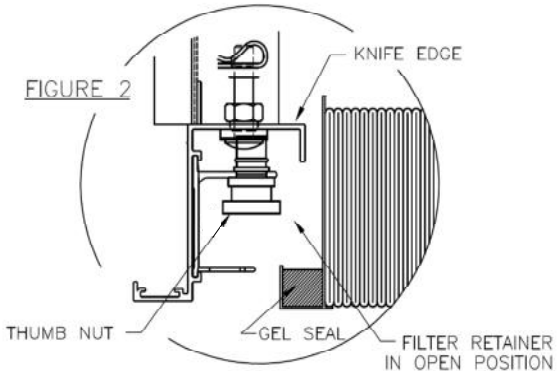


FIGURE 3

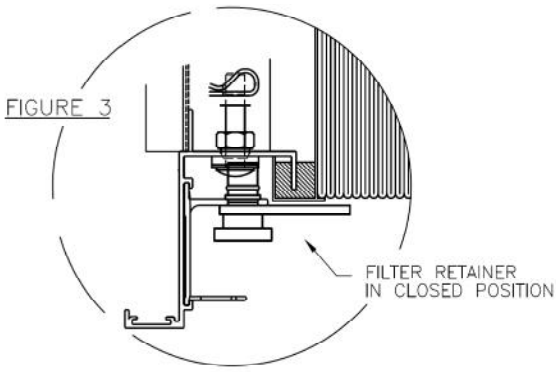


CAUTION:
HANDLE FILTER BY FRAME ONLY, NOT BY FILTER MEDIA. AVOID SIDE TO SIDE MOVEMENT OF THE FILTER IN THE DIFFUSER. SIDE TO SIDE MOVEMENT COULD CAUSE GEL SEAL TO TEAR.

THIS PAGE INTENTIONALLY LEFT BLANK

# AIR HANDLERS AND FAN COILS

## Warranty Registration and Start-up Report

**Warranty Registration Form:** Complete and submit this form within ten (10) days of start-up to comply with the terms of the Magic Aire warranty. Form must be completed to clearly indicate startup for each unit being registered.

**Mail** form(s) to Magic Aire
Warranty Department
501 Galveston St.
Wichita Falls, TX, 76301 or
**Email** customer.service@MagicAire.com

| | | | |
|---|---|---|---|
| Job Name | | City | |
| Sales Order # | | Unit Tag | |
| Model Number | | Serial Number | |
| Installer | | Quantity of Units | |

**STARTUP REPORT**

| Group | Checklist Item | Yes | No |
|---|---|---|---|
| Electrical/Operational | Have red shipping screws been removed from pallet and blower rails? | | |
| | Does electrical service correspond to unit nameplate? | | |
| | -Nameplate Supply Voltage/Phase: Rated_____ Measured_____ | | |
| | -Nameplate Rated FLA motor current: Rated_____ Measured_____ | | |
| | Does all field wiring conform to unit wiring diagram? | | |
| | Is field-provided freeze protection present? (for DX and hydronic coils) | | |
| | Is fan wheel turning the correct direction? | | |
| | Are mixing box dampers operating properly? | | |
| | Is the filter clean? | | |
| Structural | Is unit properly supported? | | |
| | Is unit installed level (necessary for proper condensate drainage)? | | |
| | Is properly sized condensate trap present? | | |
| | Is the condensate disposal system operating correctly? | | |
| | Is auxiliary external condensate drain pan installed as recommended by IOM? (not required for valid warranty) | | |
| DX Systems | Is expansion valve sensing bulb properly installed and insulated? | | |
| | Is Heat Pump Bypass Kit (HPK) present if required? | | |
| | Is the DX system charged per the condensing unit mfr's instructions? | | |
| Piping Check | Is unit piping correct and insulated to prevent condensation? | | |
| | Are the control valve packages piped correctly? | | |
| | Are Valve packages properly insulated? | | |
| | Are there any leaks detected: interior to unit, at connections, or at valve packages? | | |
| Hydronic Systems | Have customer-provided Freeze Protection measures been taken, such as Low Limit Thermostats and glycol (antifreeze) heat transfer fluids? | | |
| | Does the hydronic system include a pressure relief valve or other pressure relief device to protect the coil from operating pressures beyond the nameplate design working pressure rating? | | |
| | Are coils equipped with control valves to stop fluid flow to save energy and prevent cabinet condensation (wild coil in cooling) when heating/cooling is not required? | | |

# HHA Series Air Handler

## Installation, Operation and Maintenance Manual

035-000029-001