AIR HANDLERS AND FAN COILS

Warranty Registration and Start-up Report

Warranty Registration Form: Complete and submit this form within ten (10) days of start-up to comply with the terms of the Magic Aire warranty. Form must be completed to clearly indicate startup for each unit being registered.

Mail form(s) to Magic Aire
Warranty Department
501 Galveston St.
Wichita Falls, TX, 76301 or
Email customer.service@MagicAire.com

Job Name		City	
Sales Order #		Unit Tag	
Model Number		Serial Number	
Installer		Quantity of Units	

STARTUP REPORT

Group	Checklist Item	Yes	No
Electrical/Operational	Have red shipping screws been removed from blower discharge?		
	Does electrical service correspond to unit nameplate?		
	-Nameplate Supply Voltage/Phase: Rated_____ Measured_____		
	-Nameplate Rated FLA motor current: Rated_____ Measured_____		
	Does setting for overload device (factory or field-provided) match motor FLA?		
	Does all field wiring conform to unit wiring diagram?		
	Is field-provided freeze protection present? (for DX and hydronic coils)		
	Is fan wheel turning the correct direction?		
	Are mixing box dampers operating properly?		
	Is the filter clean?		
Structural	Is unit properly supported?		
	Is unit installed level (necessary for proper condensate drainage)?		
	Is properly sized condensate trap present?		
	Is the condensate disposal system operating correctly?		
	Is auxiliary external condensate drain pan installed as recommended by IOM? (not required for valid warranty)		
DX Systems	Is expansion valve sensing bulb properly installed and insulated?		
	Is Heat Pump Bypass Kit (HPK) present if required?		
	Is the DX system charged per the condensing unit mfr's instructions?		
Piping Check	Is unit piping correct and insulated to prevent condensation?		
	Are the control valve packages piped correctly?		
	Are Valve packages properly insulated?		
	Are there any leaks detected: interior to unit, at connections, or at valve packages?		
Hydronic Systems	Have customer-provided Freeze Protection measures been taken, such as Low Limit Thermostats and glycol (antifreeze) heat transfer fluids?		
	Does the hydronic system include a pressure relief valve or other pressure relief device to protect the coil from operating pressures beyond the nameplate design working pressure rating?		
	Are coils equipped with control valves to stop fluid flow to save energy and prevent cabinet condensation (wild coil in cooling) when heating/cooling is not required?		

THIS PAGE INTENTIONALLY LEFT BLANK

Installation, Start-Up and Service Instructions

HB Series Horizontal Air Handler
Installation, Operation and Maintenance Manual

Magic Aire HB Series units are belt drive Horizontal Air Handlers delivering nominal airflows of 400 to 8000cfm and nominal cooling capacities of 1 to 20 tons. Units may be specified with chilled water or DX cooling coils and hot water or steam heating coils to meet space cooling loads or heating loads or both.

Factory Installed Options:
-Discharge Electric Heaters (single point connection)
-Motor Start/Stop Station
-Face & Bypass dampers

Field-installed accessories include:
-factory pre-set valve packages
-mixing box
-mixing box controls
-Filter box with MERV 8 and MERV 13 filters.
-discharge grille plenum

How to Use this Manual:
This manual gives instructions regarding installation, operation and maintenance for the HB Series air handling units. For more information refer to:

Catalog brochure for unit dimensions, options, guide specifications and performance information.
New Magic 4 software for faster selection of new equipment.
Website www.magicaire.com for replacement parts guide, software downloads, product data and contact info for your local Magic Aire representative.
Replacement Parts – Identify parts needed using the replacement parts guide available at **www.magicaire.com.**

Use these instructions in conjunction with other appropriate instructions, including but not limited to those instructions supplied with the outdoor unit (if applicable). Installation must comply with all applicable local codes.

SAFETY WARNING:
Installer should pay particular attention to the following words:
NOTE–intended to clarify or make installation easier.
CAUTION–given to prevent equipment damage.
WARNING–to alert installer that personal injury and/or equipment damage may result if installation procedure is not properly followed.

GENERAL
Installation and maintenance are to be performed **only** by qualified personnel who are familiar with local codes and regulations and are experienced with HVAC equipment of this type.

WARNING: Sharp edges, coil surfaces and rotating fans are a potential injury hazard – avoid contact.

WARNING: Hazardous voltage – Disconnect and Lock Out all incoming power sources before servicing or installing unit. ELECTRIC SHOCK CAN CAUSE DEATH.

WARNING: This equipment may be installed well above finished floor—Use extreme caution when working at heights.

UNPACKING-CHECK FOR DAMAGE!

Immediately inspect each unit for damage upon receipt.

- Inspect units for external and concealed damage immediately.
- File any damage claims in accordance with Magic Aire Freight Damage Policy and Terms and Conditions (available at www.magicaire.com).
- Do not repair damaged units without written authorization.
- Protect stored units from damage.

DANGER

NEVER enter an enclosed fan cabinet or reach into a unit while the fan is running.
LOCK OPEN AND TAG the fan motor power disconnect switch before working on a fan. Take fuses with you and note removal on tag. Electric shock can cause personal injury or death.
LOCK OPEN AND TAG the electric heat coil power disconnect switch before working on or near heaters.
Failure to follow these warnings could lead to personal injury or death.

WARNING

CHECK the assembly and component weights to be sure that the rigging equipment can handle them safely.
Note also, the centers of gravity and any specific rigging instructions.
CHECK for adequate ventilation so that fumes will not migrate through ductwork to occupied spaces when welding or cutting inside air-handling unit cabinet or plenum.
WHEN STEAM CLEANING COILS be sure that the area is clear of personnel.
DO NOT attempt to handle access covers and removable panels on outdoor units when winds are strong or gusting until you have sufficient help to control them. Make sure panels are properly secured while repairs are being made to a unit.
DO NOT remove access panel fasteners until fan is completely stopped. Pressure developed by a moving fan can cause excessive force against the panel which can injure personnel.
DO NOT work on dampers until their operators are disconnected.
BE SURE that fans are properly grounded before working on them.
Failure to follow these warnings could result in personal injury or equipment damage.

UNPACKING-CAUTION!

After unpacking the blower section,

REMOVE RED SHIPPING SCREWS

from the blower discharge flanges as indicated in Figures 1 and 2. These screws stabilize the fans during shipping and need to be removed.

CAUTION! Not removing red shipping screws can result in unsatisfactory vibration or blower noise or excessive air recirculation.

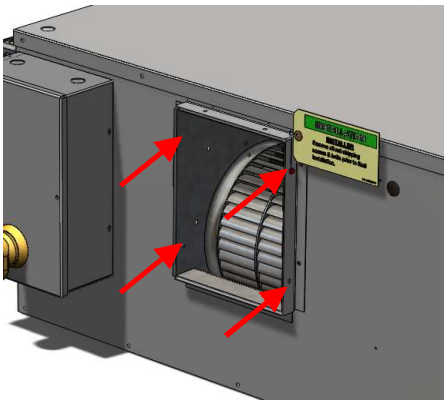

Figure 1
Remove Red Shipping Screws
(4 per blower discharge—single discharge shown)

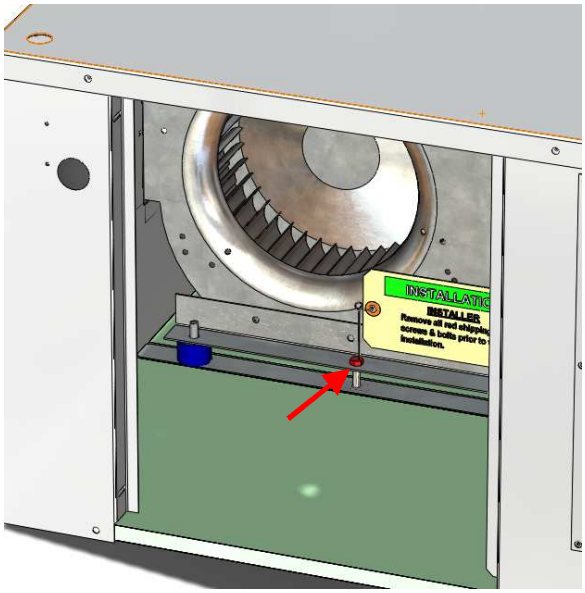

Figure 2
Remove Red Shipping Screws
(one from each blower rail—two total)

PREINSTALLATION

1. Check items received against packing list.
2. Do not stack unit components or accessories during storage. Stacking can cause damage or deformation.
3. If unit is to be stored for more than 2 weeks prior to installation, observe the following precautions:
   a. Choose a dry storage site that is reasonably level and sturdy to prevent undue stress or permanent damage to the unit structure or components. Do not store unit on vibrating surface. Damage to stationary bearings can occur. Set unit off ground if in heavy rain area.
   b. Remove all fasteners and other small parts from jobsite to minimize theft. Tag and store parts in a safe place until needed.
   c. Cover entire unit with a tarp or plastic coverall. Extend cover under unit if stored on ground. Secure cover with adequate tie downs or store indoors. Be sure all coil connections have protective shipping caps.
   d. Monthly — Remove tarp from unit, enter fan section through access door or through fan inlet, and rotate fan and motor slowly by hand to redistribute the bearing grease and to prevent bearing corrosion.

Rigging — Do not remove shipping skids or protective covering until unit is ready for final placement. Use slings and spreader bars as applicable to lift unit. *Do not lift unit by coil connections or headers.*

Do not remove protective caps from coil piping connections until ready to connect piping.

Do not remove protective cover or grease from fan shaft until ready to install sheave.

Lay rigid temporary protection such as plywood walkways in unit to prevent damage to insulation or bottom panel during installation.

WARNING-AUXILIARY DRAIN PAN RECOMMMENDED:

The International Mechanical Code (IMC) section 307.2.3 requires the use of auxiliary drain pans. Many municipalities have adopted this code.

Magic Aire holds that this practice represents the standard for professional installation whether or not this code has been adopted in a specific municipality or territory. As such, water damages that would have been prevented had an auxiliary pan been deployed will not be considered for compensation. This position is taken regardless of whether the source of the moisture was specified as a potential failure mode in the applicable building code or not. A freeze burst, cracked drain pan, failed weld, or corrosion induced leak are some of the potential failure modes that are mitigated when an auxiliary pan is properly installed. Professional installers recognize the value of protecting customer assets against foreseeable events. Customers who choose to avoid the cost of common protective measures waive their right to seek damages when those foreseeable events occur. If the product is located above a living space or where damage may result from condensate overflow, install a watertight pan of corrosion-resistant metal beneath the unit to catch over-flow which may result from clogged drains or from other reasons. Provide proper drain piping for this auxiliary pan. Consult local codes for additional precautions before installation.

INSTALLATION

UNIT SUSPENSION

Horizontal Units: Acceptable forms of unit suspension are shown in Fig. 3 and 4. A field-supplied platform mount is recommended, especially for larger unit sizes. Units can also be supported by suspending the unit from crossbeams at the front and rear. Ensure that suspension rods are secured to adequately support the unit and that the rods extend entirely through their associated fasteners. It is recommended that framing be constructed from angle iron or formed-strut materials.

With Mixing Boxes: HB units sizes 30-80 with mixing boxes should be supported with cross-beams at each end of the unit and at the duct connection side of the mixing box. Sizes 04-20 with mixing box—no additional support is required.

WARNING! INSURE THAT UNIT IS ADEQUATELY SUPPORTED FROM STRUCTURE TO PREVENT DAMAGE OR INJURY CAUSED BY FALLING EQUIPMENT! If uncertain about how to connect to the structure, consult a qualified structural engineer.

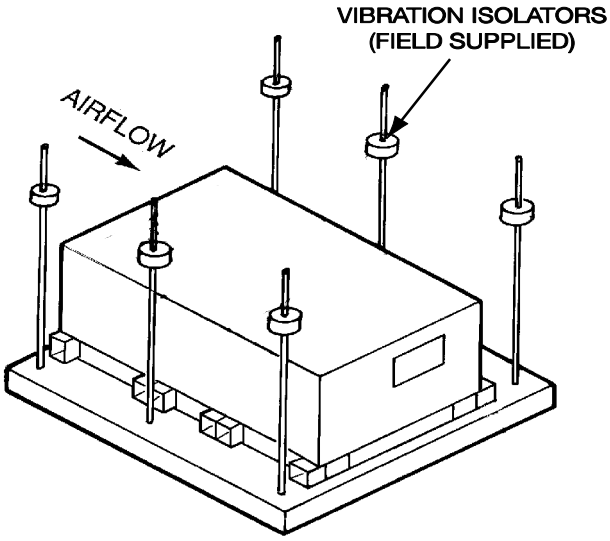

CEILING – RECOMMENDED PLATFORM MOUNT

Fig. 3 Unit Suspension

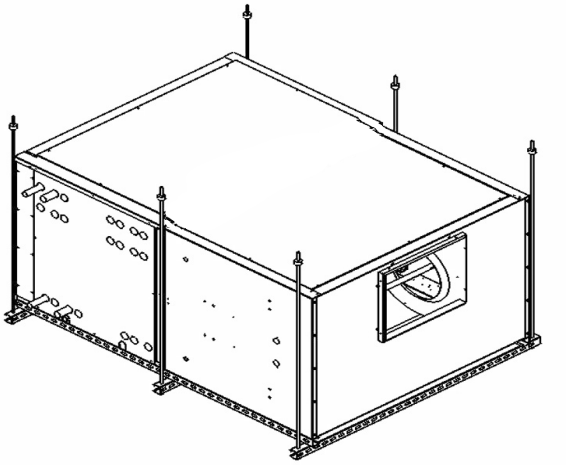

CEILING – ALTERNATE CROSSBEAM MOUNT

Fig. 4 Unit Suspension

INSTALLATION—DUCTWORK (CONT'D)

DUCTWORK CONNECTIONS

Install supply and return ductwork to the unit as required for the application. Note that free discharge or free return is acceptable.

Return Ductwork: Install return ductwork by attaching one side of a field-provided flexible duct connector to the duct flange on the return side of the unit (filter side). Attach the other side of the flexible duct connector to the return ductwork. Seal the connections using duct mastic or HVAC tape.

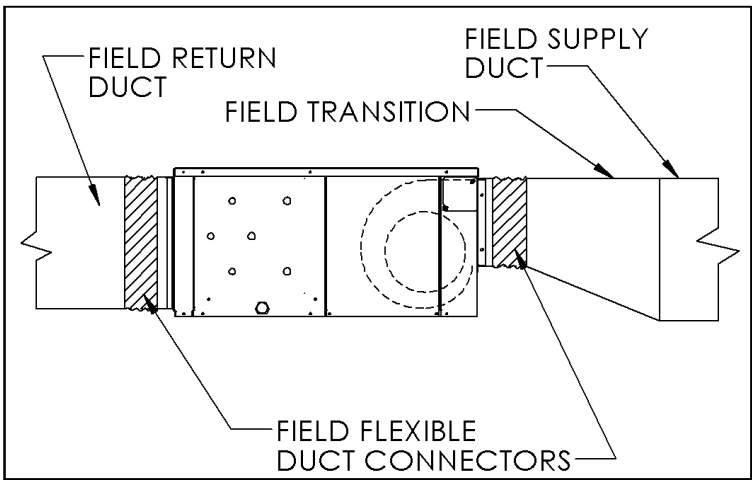

Fig. 5 — HB size 04 to 40 Duct Connections

Supply Ductwork—Unit Sizes 04-40: Install supply ductwork by attaching one side of a field-provided flexible duct to the fan discharge duct collar on the front of the unit. Attach the other side to the supply ductwork. Seal the connections using duct mastic or HVAC tape. Refer to Figure 5.

Supply Ductwork—Unit Sizes 60-80: Install supply ductwork by attaching a field-provided supply duct plenum over the fan discharges. Supply duct plenum size is critical to fan performance—size as indicated in Figure 6.

CAUTION: DO NOT USE PANTS-LEG TYPE DISCHARGE DUCT AT THE FAN DISCHARGES. The fans achieve rated performance ONLY when installed with the supply duct plenum. Attach the supply duct plenum to the supply duct using a flexible connector. Seal the connections using duct mastic or HVAC tape. Refer to Figure 6.

NOTE: It is acceptable to omit the flexible duct connectors, but this may allow normal operating vibration or noise to transfer through the duct system **leading to customer complaints.**

Size all ductwork according to SMACNA and ASHRAE duct design standards.

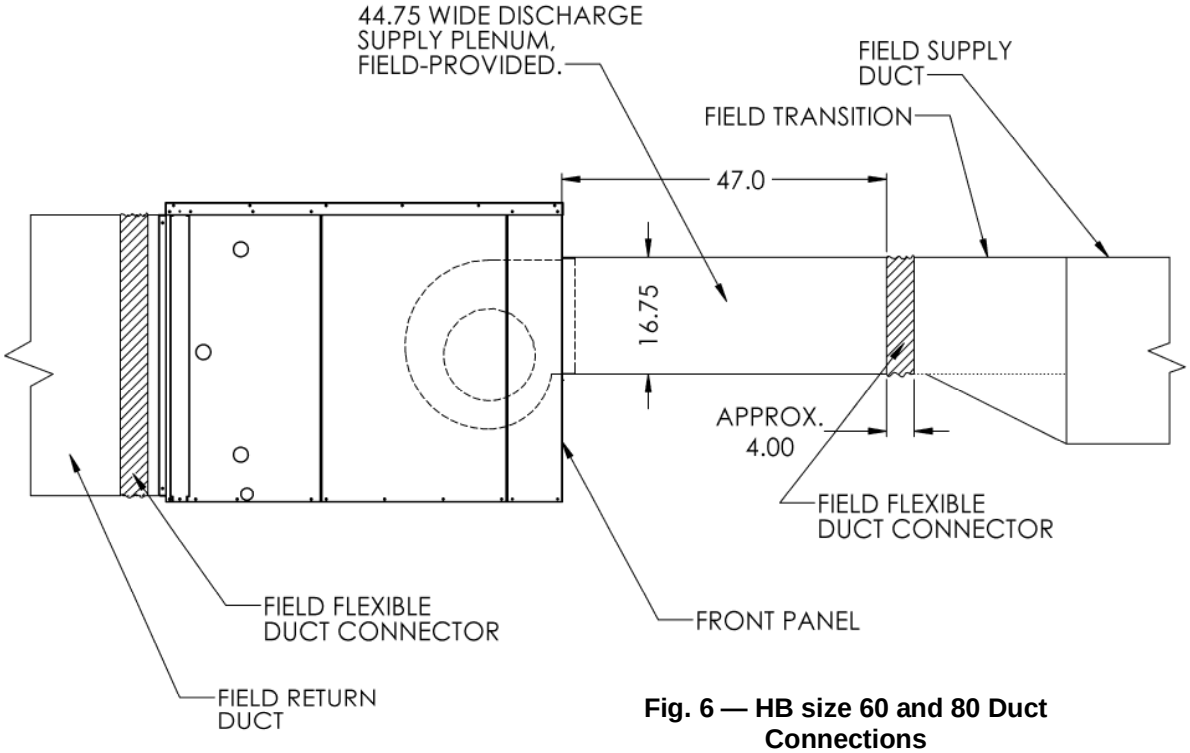

Fig. 6 — HB size 60 and 80 Duct Connections

INSTALLATION-ELECTRICAL

DANGER

WARNING: Hazardous voltage. Only qualified personnel must install the electrical service. Disconnect and Lock Out all incoming power sources before connecting to electrical service.

WARNING: This appliance must be permanently grounded in accordance with the National Electrical Code and local code requirements.

WARNING: For use with copper conductors only.

Typical wiring diagrams are shown on the following pages FOR REFERENCE. Always refer to the wiring diagram on the air handling unit for actual wiring.

Connect electrical service to unit. Refer to unit wiring diagram**. NOTE:** CHECK MOTOR RATING PLATE FOR CORRECT LINE VOLTAGE. For power supply connection, route field power wiring to Motor Start/Stop Station (MSS) disconnect switch (if provided) or motor leads in the junction box (j-box).

Refer to nameplate FLA, maximum overcurrent protection device (MOPD) and minimum circuit ampacity (MCA). Also refer to wiring diagram affixed to unit to make control and power wiring connections.

Installer is responsible for power wiring, branch circuit over current protection, **NOTE**: Motor provided **may or may not** have internal thermal overload protection. Units ordered with Motor Start/Stop (MSS) option or Factory Electric Heat include motor starter with overload if required for the factory-provided motor.
WARNING! Units ordered "j-box only" may need additional field-provided motor overload protection (all 3-phase motors and some single phase motors).

NOTE: Units with Junction Box option have 4x4 J-box mounted on outside of unit. Refer to dimensional drawings.

NOTE: Units with factory installed electric heaters have fan starter and overload (if required) located inside the electric heat control box.

DANGER

NEVER enter an enclosed fan cabinet or reach into a unit while the fan is running.
LOCK OPEN AND TAG the fan motor power disconnect switch before working on a fan. Take fuses with you and note removal on tag. Electric shock can cause personal injury or death.
LOCK OPEN AND TAG the electric heat coil power disconnect switch before working on or near heaters.
Failure to follow these warnings could lead to personal injury or death.

NOTE: When installing the AEH auxiliary electric heat accessory, the heater control box contains the motor starter and allows for single-point line connection (one power circuit for both electric heater and fan motor). Motor overload is provided, when required, with the motor starter.

WARNING: CHECK FACTORY OR FIELD PROVIDED OVERLOAD DEVICE SETTING—MAKE SURE IT IS EQUAL TO THE MOTOR FLA AT RATED VOLTAGE. Improper setting may result in equipment malfunction, equipment failure, or fire or other hazardous condition leading to property damage or personal injury or death.

MOTOR START-STOP STATION TYPICAL WIRING DIAGRAMS

Single Phase, Relay Control

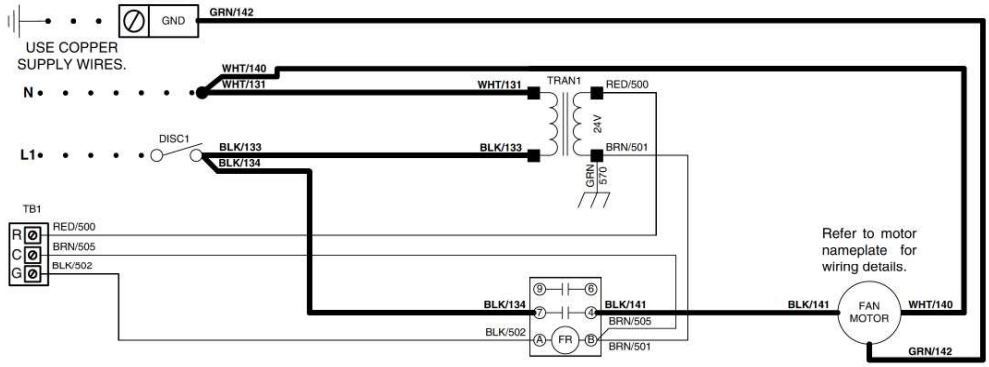

Note: Single phase units may utilize a contactor instead of a relay.

Three Phase, Contactor Control

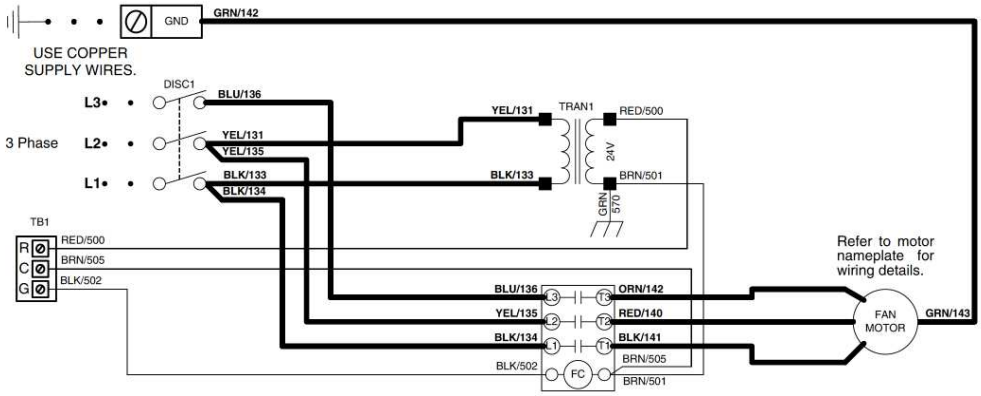

Three Phase, Starter Control

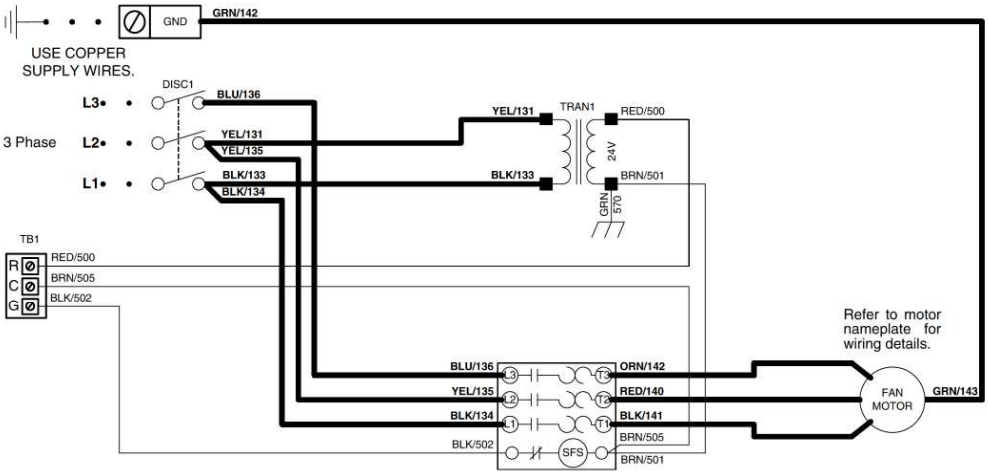

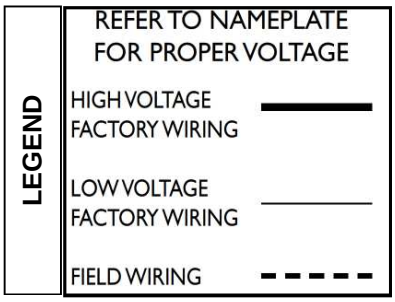

NOTES:

1. These diagrams represent the factory-installed MSS option. If the j-box option is provided, an arrangement like this may be field-provided and installed to allow the customer's controls to start and stop the fan. Selection of field provided and installed electrical components is the responsibility of the installer.
2. MSS provides single-speed fan motor control and includes lockable, non-fused disconnect switch, 75VA 24V control transformer, fan relay or contactor or starter (with overload if required), low voltage terminal block and indoor enclosure.
3. Typical wiring is shown. For exact wiring, refer to the wiring diagram provided with the unit. 4. Factory-installed electric heat includes the functionality of the MSS, so MSS is not required.
5. Refer to the following pages for j-box and electric heat options.
6. Units ordered for 208V-240V voltage selection are factory wired for 240V. Field may rewire motor and transformer primary tap for operation at 208V.

JUNCTION-BOX ONLY OPTION TYPICAL WIRING DIAGRAMS

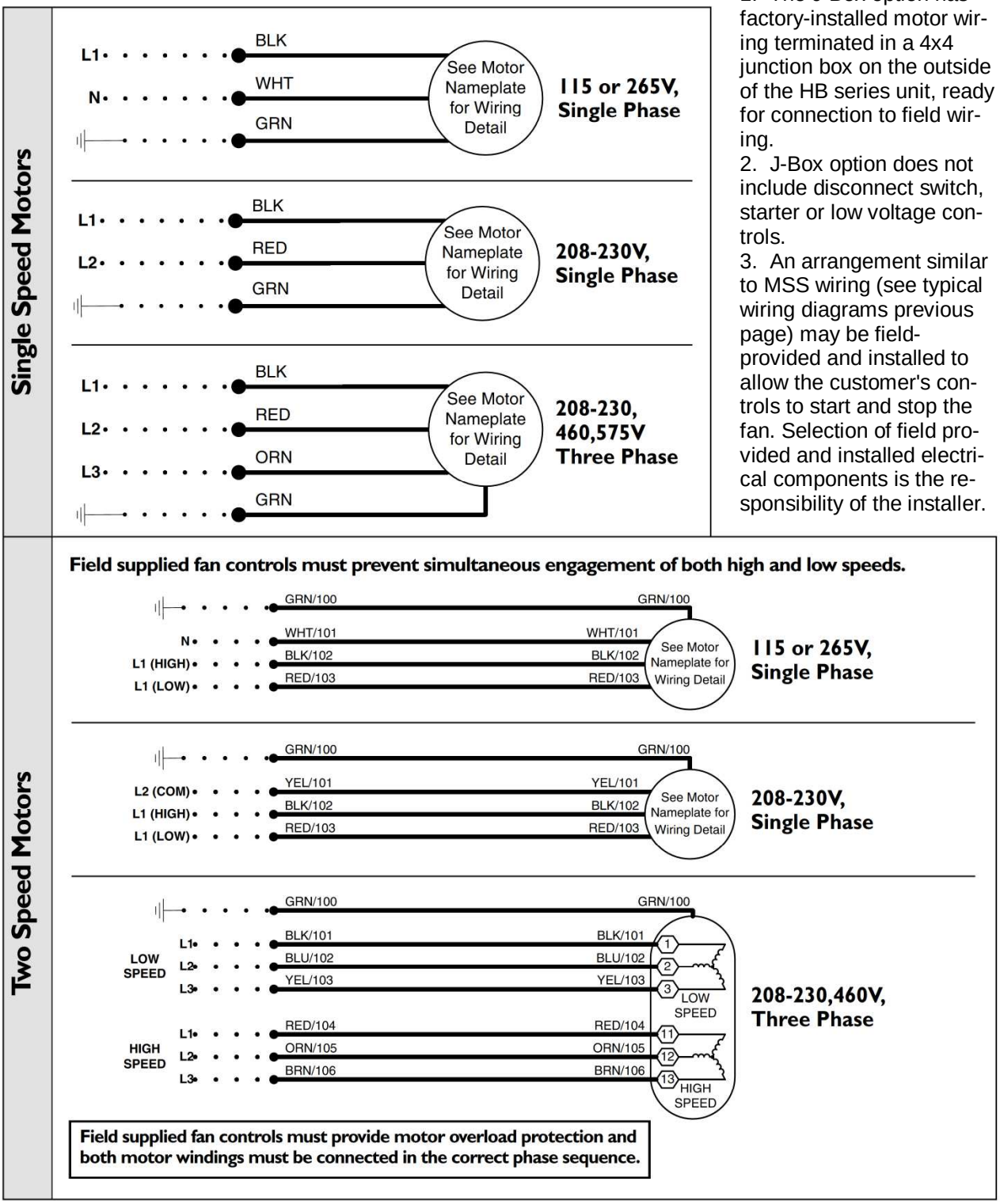

NOTES:

1. The J-Box option has factory-installed motor wiring terminated in a 4x4 junction box on the outside of the HB series unit, ready for connection to field wiring.
2. J-Box option does not include disconnect switch, starter or low voltage controls.
3. An arrangement similar to MSS wiring (see typical wiring diagrams previous page) may be field-provided and installed to allow the customer's controls to start and stop the fan. Selection of field provided and installed electrical components is the responsibility of the installer.

CAUTION

With 2-speed motor, make sure that only one speed winding is energized at a time. Energizing both windings simultaneously will result in motor damage and will void motor warranty. Magic Aire strongly recommends use of an isolation relay or similar device to insure that only one winding is energized.

FACTORY ELECTRIC HEAT OPTION
TYPICAL WIRING DIAGRAMS

HB*Units, 240V-1ø:1-6kW
(Single Element)

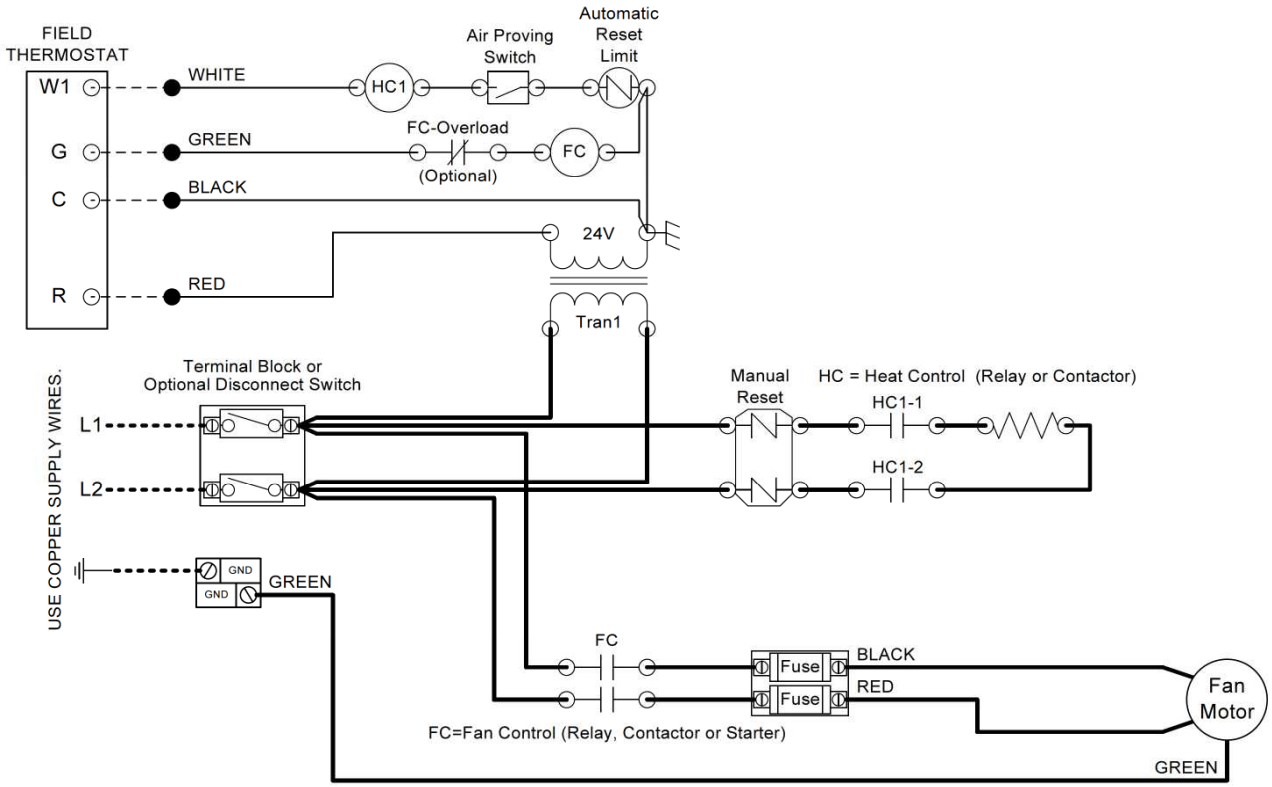

NOTES:
1. Motor Start/Stop Station (MSS) not required when factory-installed electric heat is selected. The electric heater contains the fan motor starter and low-voltage controls with "single-point-line" power connection.
2. See the unit wiring diagram for actual wiring.

FACTORY ELECTRIC HEAT OPTION
TYPICAL WIRING DIAGRAMS

HB*Units – 240V-3ø:1-10kW, 480V-3ø:2-20kW
(Star Wiring)

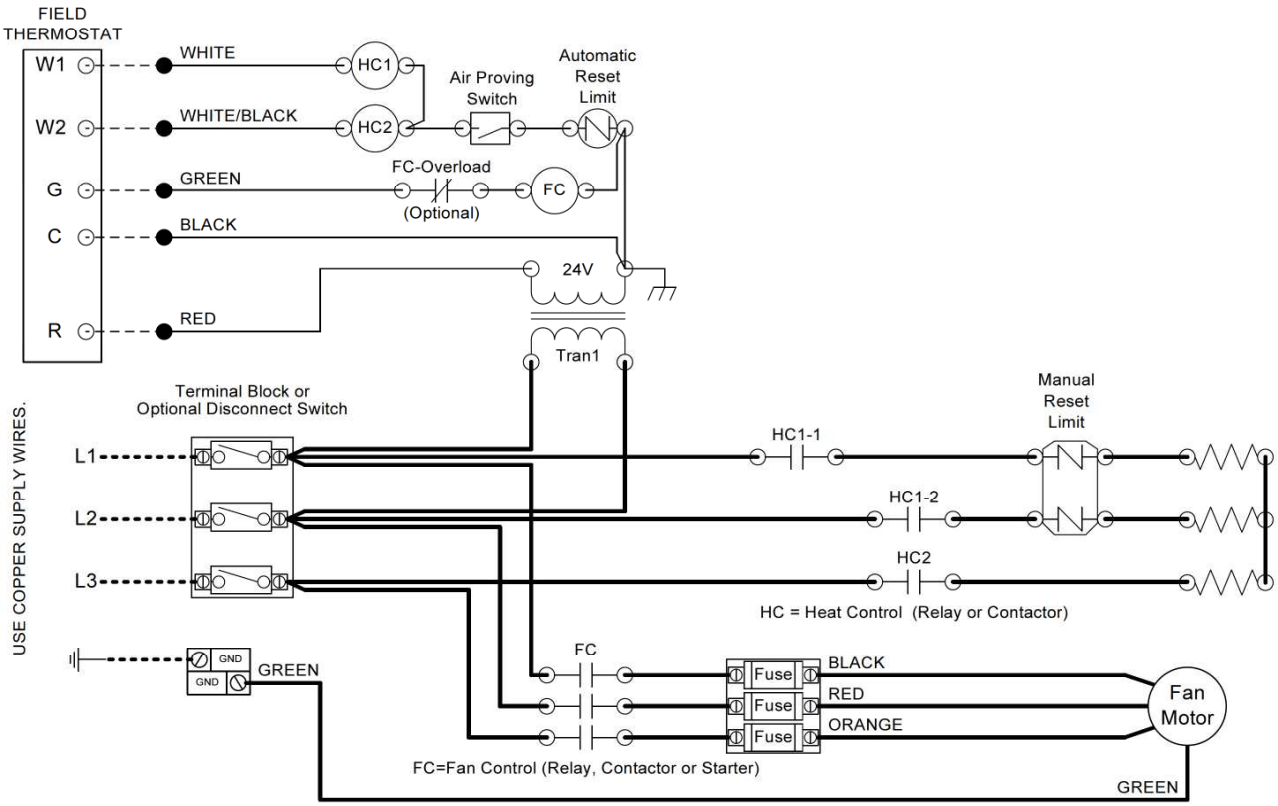

NOTES:
1. Motor Start/Stop Station (MSS) not required when factory-installed electric heat is selected. The electric heater contains the fan motor starter and low-voltage controls with "single-point-line" power connection.
2. See the unit wiring diagram for actual wiring.

NOTES:
1. This option is not usual but may be provided when custom heaters are needed. Motor Start/Stop Station (MSS) not required when AEH accessory field-installed electric heat is selected. The electric heater contains the fan motor starter and low-voltage controls with "single-point-line" power connection.
2. Units will have "Full Line Break" heater contactor (HC1) starting in 2012. See the unit wiring diagram for actual wiring.
3. NOT ALL POSSIBLE WIRING ARRANGEMENTS SHOWN. REFER TO UNIT WIRING DIAGRAM FOR ACTUAL WIRING.

AUXILIARY ELECTRIC HEAT (AEH) FIELD INSTALLED ACCESSORY TYPICAL WIRING DIAGRAMS

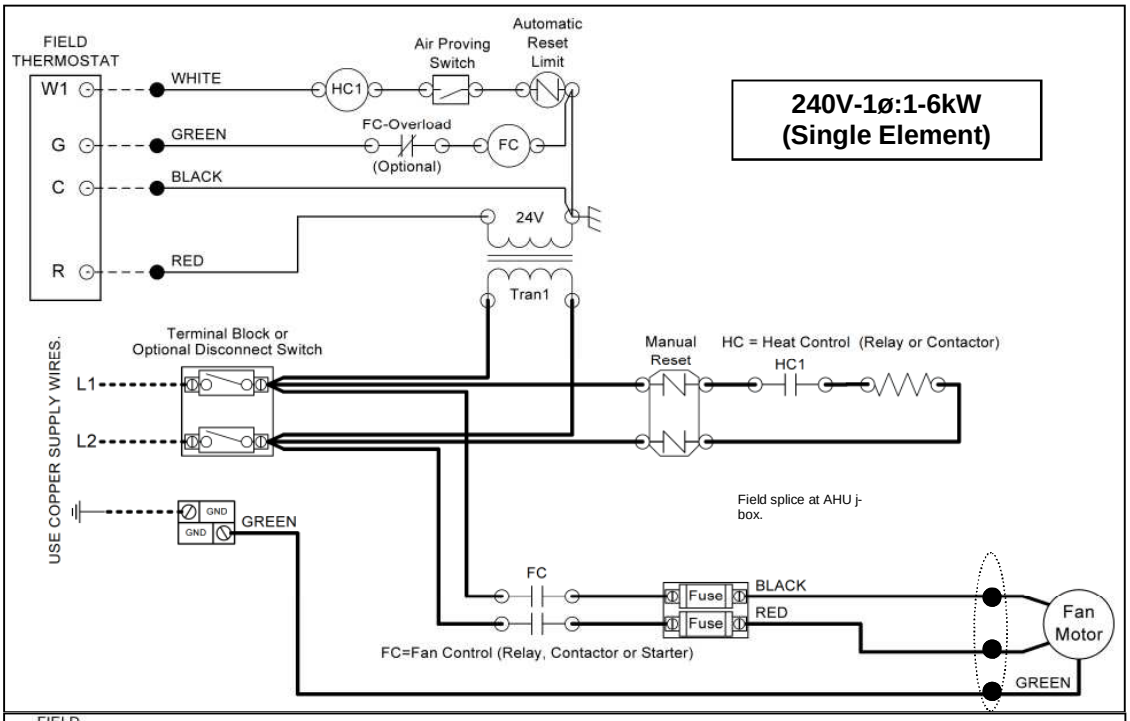

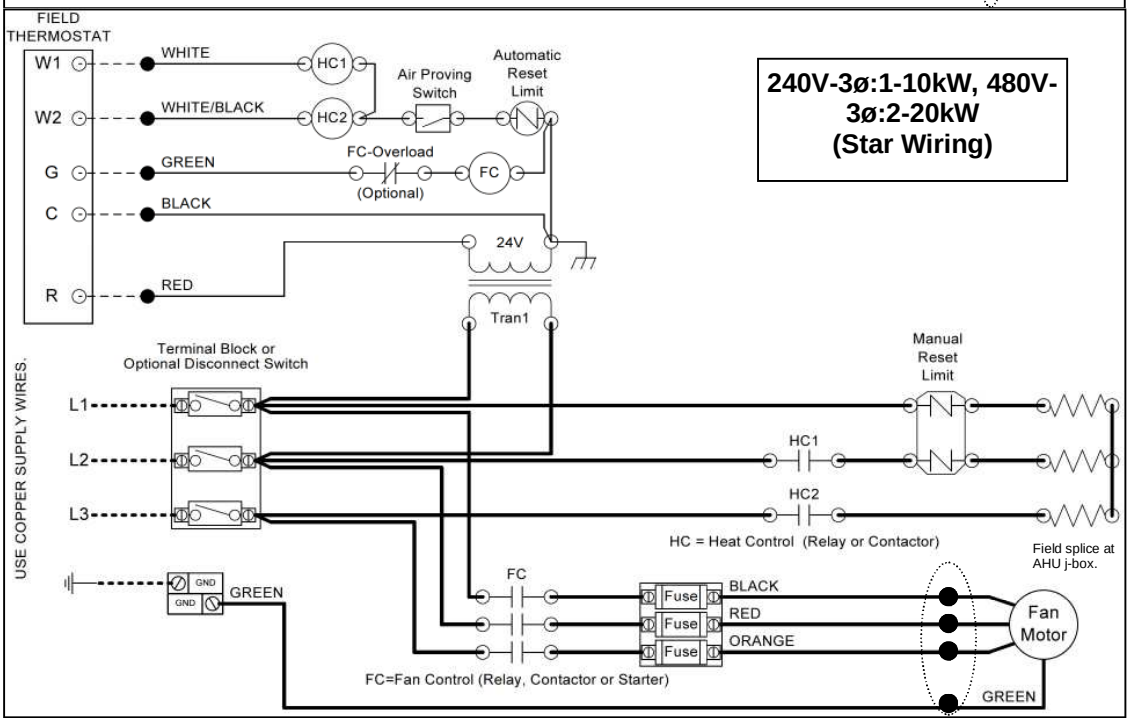

HB Series
Service Clearances

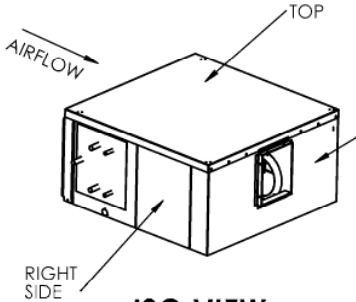

ISO VIEW

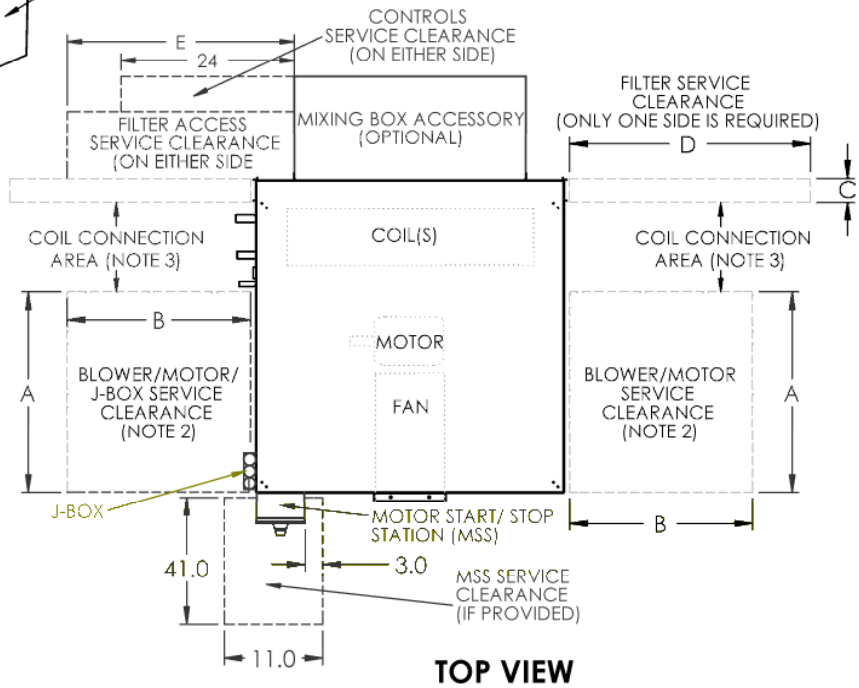

TOP VIEW

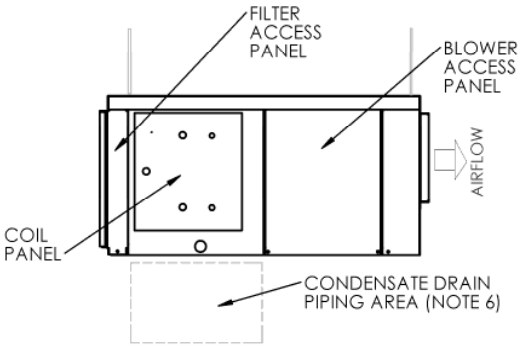

RIGHT SIDE VIEW
(MSS NOT SHOWN)

HB UNIT SIZE	DIMENSIONS				
	A	B	C	D	E
04, 06	18	36	4	30	26
08, 12	20	36	4	36	31
16, 20	23	36	4	30	38
30, 40	30	36	4	36	34
60	31	48	4	36	35
80	31	48	4	36	30

NOTES:
1. NOT TO SCALE. REFER TO CATALOG DRAWINGS FOR UNIT OUTLINE DIMENSIONS.

2. MOTOR & BLOWER PULLIES & BELT ARE LOCATED ON THE SAME SIDE AS COOLING COIL CONNECTION (UNIT WITH 2 COILS) OR 2-PIPE/HEATING COIL CONNECTION (UNIT WITH SINGLE COIL).

3. ALLOW CLEARANCE FOR FIELD PIPING AS REQUIRED BY THE PROJECT REQUIREMENTS.
CONNECTIONS MAY BE ON ONE SIDE OR ON BOTH SIDES.

4. REFER TO INSTALLATION INSTRUCTIONS FOR UNIT HANGING (SUSPENSION) REQUIREMENTS.

5. COIL, DRAINPAN OR BLOWER REPLACEMENT REQUIRES UNIT TO BE REMOVED TO FLOOR FOR SAFE WORKING CONDITION. ALLOW FULL WIDTH OF UNIT FOR COIL REMOVAL. REFER TO SERVICE INSTRUCTIONS.

6. ALLOW ADEQUATE DEPTH FOR CONDENSATE DRAIN TRAP. REFER TO INSTALLATION INSTRUCTIONS FOR TRAP REQUIREMENTS.

INSTALLATION

Condensate Drain — To prevent excessive build-up of condensate in drain pan, adequate trap clearance (trap depth) must be provided beneath the unit as indicated in Fig. 7. See Installation, Condensate Drain section for additional details.

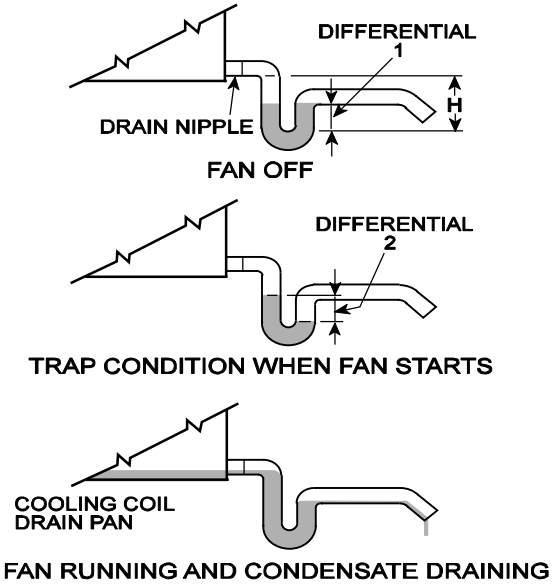

Fig. 7 — Condensate Drain

INSTALLATION

Condensate Drain — Install a trapped condensate drain line at unit drain connection. All HB units have a 3/4 in. FPT condensate drain connection.
Measure maximum design negative static pressure upstream from the fan. Referring to Fig. 7, height "H" must be equal to or larger than negative static pressure at design operating conditions. Prime enough water in trap to prevent losing seal (Differential 1). When the fan starts, Differential 2 is equal to the maximum negative static pressure.

Provide freeze-up protection as required to insure reliable condensate drainage. Freeze protection measures are customer-supplied and installed.

Mixing Box Actuator

MIXING BOX ACTUATOR ASSEMBLY (Fig. 8 and 9) — To assemble the mixing box actuator:

1. Press logic module onto actuator.
2. Remove lock nut from swivel nut assembly. Place swivel nut assembly into slot on actuator arm. Hand tighten lock nut onto swivel nut assembly. Swivel nut assembly will need to be adjusted once installed for proper actuator motion.
3. Attach actuator arm assembly to actuator with four 1/4-in. screws. Arm may need to be repositioned once installed to ensure proper actuator motion.

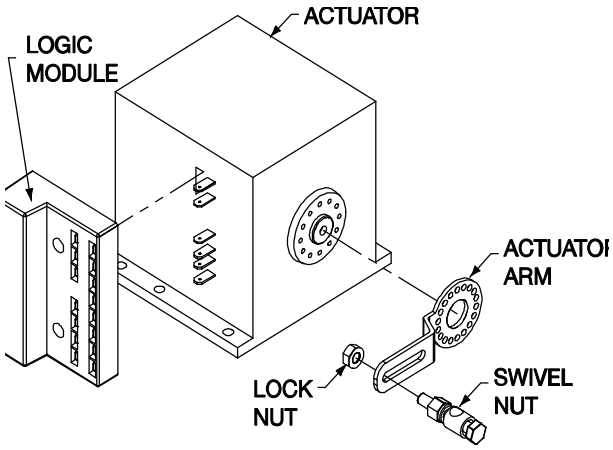

Fig. 8 — Actuator Assembly

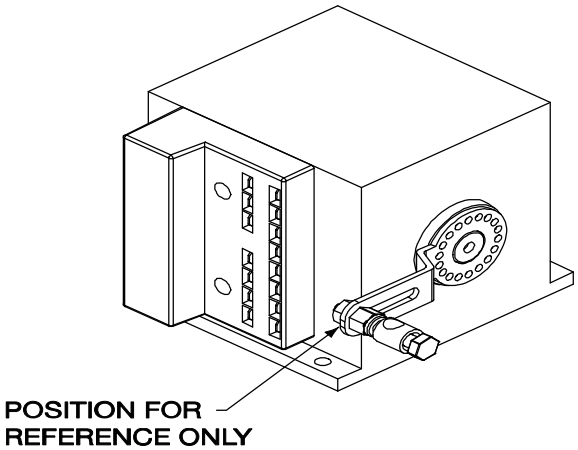

Fig. 9— Assembled Actuator

ACTUATOR INSTALLATION — To install the actuator:

1. Align actuator so that the actuator linkage arm will have enough clearance for full range of motion. Refer to Fig. 10-13. Align center line of the actuator as close to the centerline of DR4 as possible. See Fig. 11 and 12. Use at least 4 self-drilling screws to mount directly to top of unit.
2. Place linkage arm assembly (linkage arm and swivel nut arm) onto DR4 as shown in Fig. 11 and 12. Do not tighten to DR4 as adjustments need to be made.
3. Place linkage rod between actuator arm and linkage arm on DR4. See Fig. 11. Linkage rod may need to be cut to length. Ensure actuator arm and linkage arm are parallel.
4. Ensure linkage assemblies are properly secured as shown in the linkage assembly instructions sent with the unit.
5. Open one set of dampers to 100% open and the other to 100% closed. Ensure actuator motion will operate as needed and tighten all linkages, swivel assemblies, and linkage rods into place.
6. Ensure actuator motion opens and closes damper assemblies fully. If not, adjust settings of linkage arm, actuator arm, swivel nut assemblies, and linkage rods one at a time until full operation is achieved.

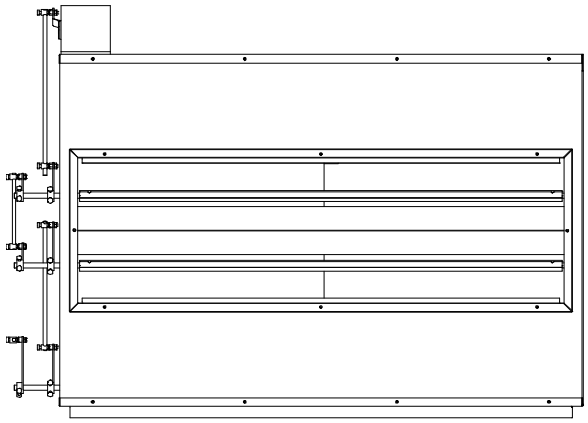

Fig. 11-Top View

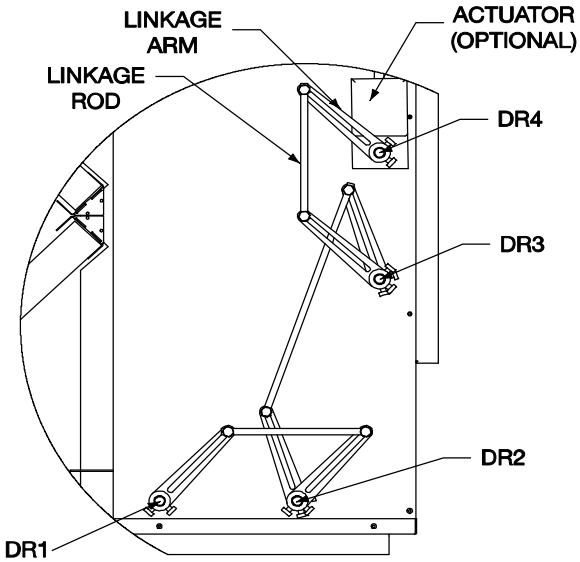

Fig. 12-Area A Detailed View

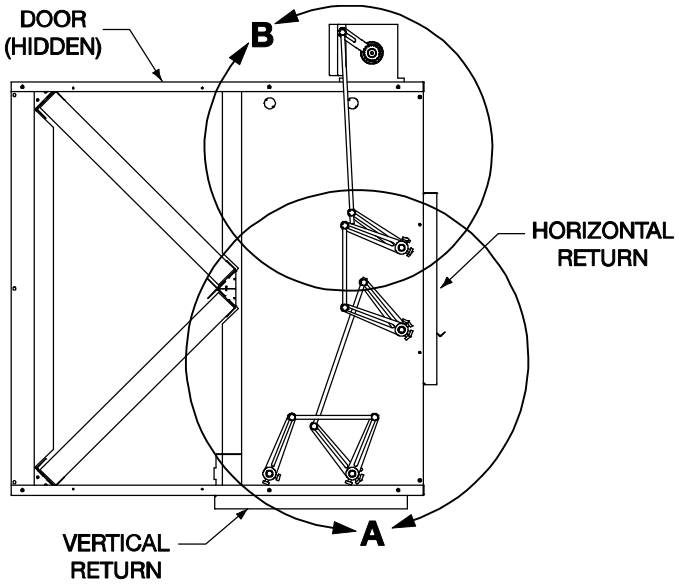

Fig. 10 — Actuator Installation Front View

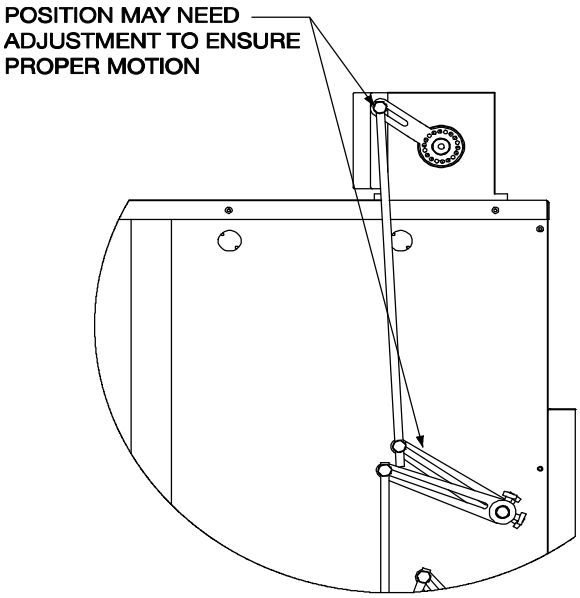

Fig. 13 — Area B Detailed View

Mixing Box Air Sensor

MIXING BOX MIXED AIR SENSOR BRACKET ASSEMBLY — To assemble the mixed air sensor bracket assembly to the mixing box, attach mixed air sensor to mixed air sensor bracket. See Fig. 14.

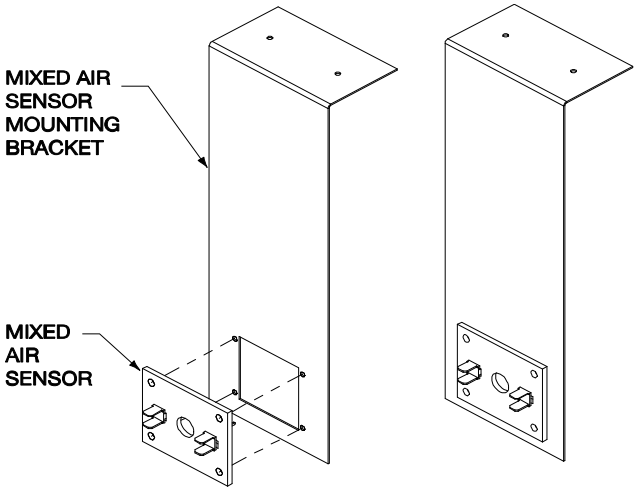

Fig. 14 — Mixed Air Sensor Bracket

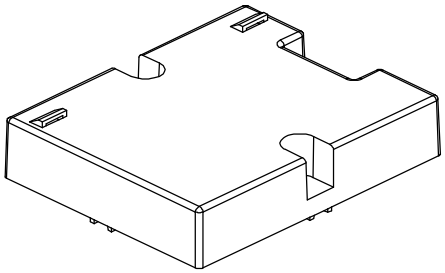

Fig. 16 — Enthalpy Sensor

MIXED AND OUTSIDE AIR SENSORS INSTALLATION

1. Remove access panel and filters as needed.
2. Place mixed air sensor assembly in airstream as shown in Fig. 15.
3. Attach to top of unit with self drilling screws.
4. Drill or knockout 1/2 in. hole into top of mixing box close to actuator as shown in Fig. 15.
5. Insert snap bushing in hole. Run wires inside unit, along top of mixing box, between the filter rail and insulation, and attach to mixed air sensor.
6. Place enthalpy sensor, shown in Fig. 16, in location suitable to meet manufacturer's requirements.
7. Connect all sensors to logic module per manufacturer's instructions.
8. Test to ensure proper function.
9. Replace all parts and tape or fill any holes or gaps made.

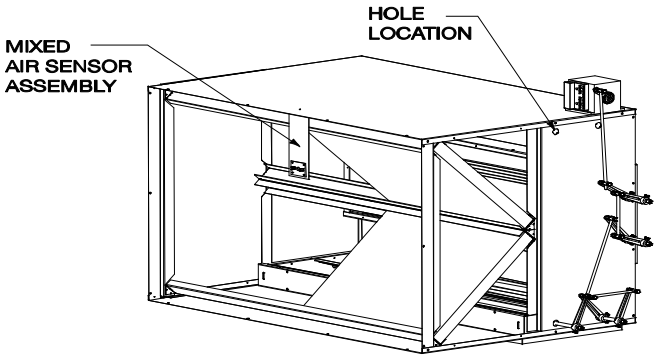

Fig. 15 — Mixed Air Sensor Installation

Mixing Box — To install mixing box:

1. Insert rear return duct flanges of unit into opening of mixing box.
2. Ensure all unit flanges are inside the opening of the mixing box and screw a minimum of three screws into each of the unit's four flanges using self-drilling screws.
3. The mixing box should now hang freely from the unit (Figure 17). For HB sizes 30 and above, support back edge of mixing box using Unistrut. Insure that the support strut does not interfere with the damper linkages.
4. Remove unit filters from unit before start-up.

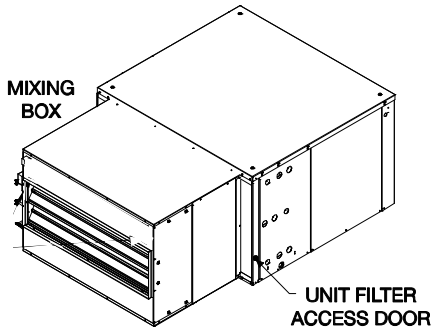

Fig. 17 — Installing Mixing Box

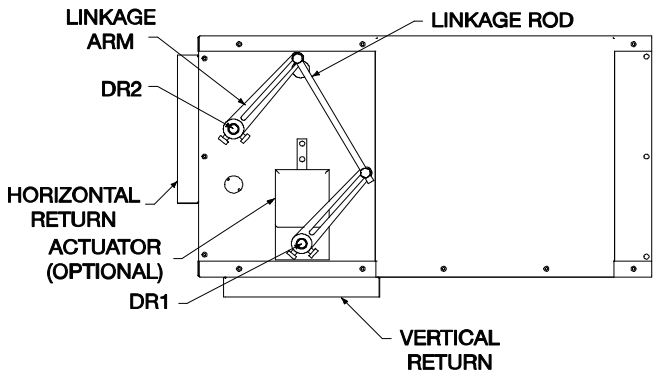

Fig. 18 — Linkage Assembly Front View (Sizes 08-12)

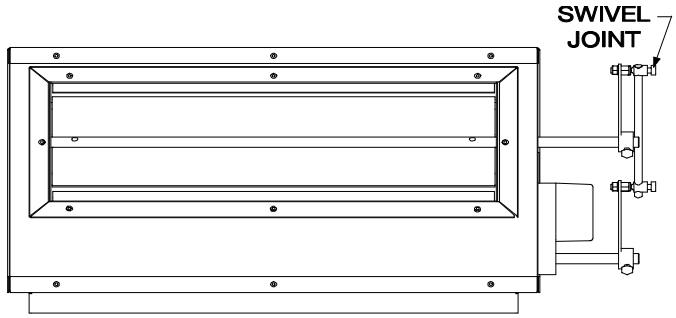

Fig. 19 — Linkage Assembly Side View (Sizes 08-12)

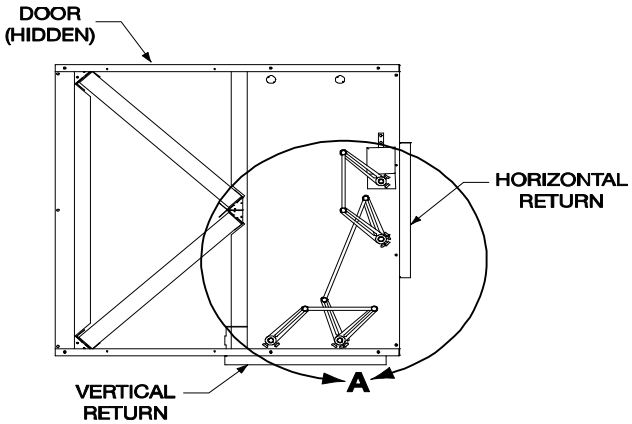

Fig. 20 — Linkage Assembly Front View (Sizes 16-80)

MIXING BOX LINKAGE INSTALLATION
(Sizes 16-80)

To install the mixing box linkage assembly on unit sizes 16 to 80:

1. Check for correct number of parts:
   3 – Linkage rods
   6 – Linkage arms
   6 – Swivel joints
   NOTE: A 7/16 in. box end wrench and/or socket will be needed for linkage installation.
2. An alternate field-supplied actuator may be installed directly on the damper shaft if required. If a factory supplied actuator is ordered for the mixing box, refer to Mixing Box Actuator.
3. Orientate actuator to avoid interference with linkage assembly. Refer to Fig. 18 and 19.
4. Ensure dampers are fully closed or open depending on application, and secure actuator to shaft. Actuator should open and close dampers fully. Adjust actuator as needed.
5. Place a linkage arm onto DR3 and DR2. See Figures 22 and 23. for proper positioning. Ensure that swivel joints are fully extended to the end of the linkage arm and tighten.

Fig. 21 — Linkage Assembly Side View (Sizes 16-80)

6. Insert linkage rod into swivel joints and tighten. Linkage rod may need to be cut down to size. Linkage arms should be parallel. Assembly should still be loose on damper rods. This will be linkage assembly no. 1.
7. Place linkage arm onto DR1 and DR2. Ensure swivel joints are fully extended to the end of the linkage arm and tighten.
8. Insert linkage rod into swivel joints and tighten. Linkage rod may need to be cut down to size. Linkage arms should be parallel.
9. Ensure dampers are fully open or closed and tighten linkage arms to damper rods. Linkage assembly should be able to open and close dampers fully without interference. Adjust accordingly.
10. Place linkage arm onto DR3 and DR4. Ensure swivel joints are fully extended to the end of the linkage arm and tighten.
11. Insert linkage rod into swivel joints and tighten. Linkage rod may need to be cut down to size. Linkage arms should be parallel.
12. Ensure dampers are fully open or closed and tighten linkage arms to damper rods. Linkage assembly should be able to open and close dampers fully without interference. Adjust accordingly.
13. Ensure one set of dampers is fully open and the other fully closed. Adjust linkage assembly no. 1 to allow travel without interference and tighten to DR2 and DR3.
14. The actuator should now be able to power the dampers fully open and fully closed without interference. Adjust linkage assemblies as need.

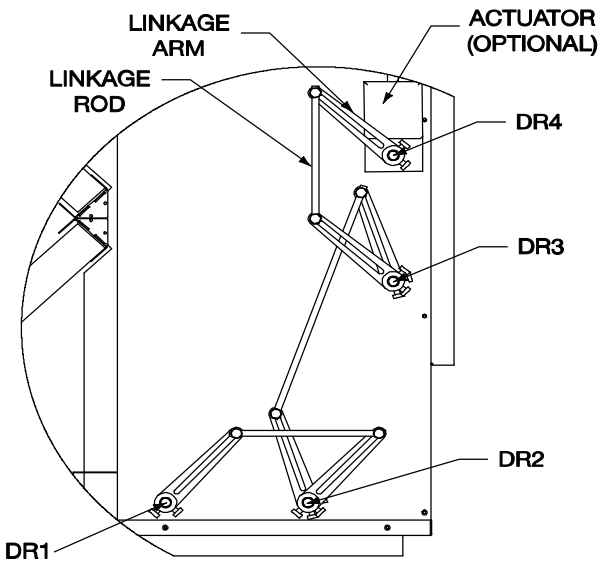

Fig. 22 — Area A Detailed View

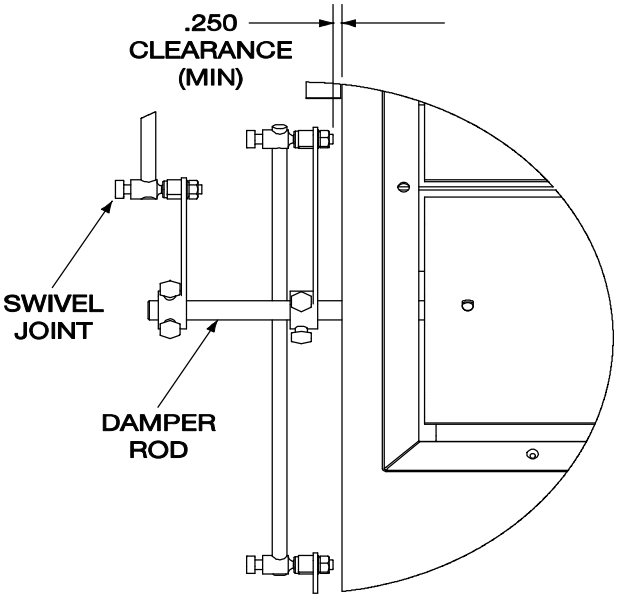

Fig. 23 — Area A Detailed View

Install Sheaves on Motor and Fan Shafts —

Factory-supplied drives are prealigned and tensioned, however, Magic Aire recommends that the belt tension and alignment be checked before starting the unit. Always check the drive alignment after adjusting belt tension.

When field installing or replacing sheaves, install sheaves on fan shaft and motor shaft for minimum overhang. (See Fig. 24) Use care when mounting sheave on fan shaft; too much force may damage bearing. Remove rust-preventative coating or oil from shaft. Make sure shaft is clean and free of burrs. Add grease or lubricant to bore of sheave before installing.
ALIGNMENT — Make sure that fan shafts and motor shafts are parallel and level. The most common causes of misalignment are nonparallel shafts and improperly located sheaves. Where shafts are not parallel, belts on one side are drawn tighter and pull more than their share of the load. As a result, these belts wear out faster, requiring the entire set to be replaced before it has given maximum service. If misalignment is in the sheave, belts will enter and leave the grooves at an angle, causing excessive belt cover and sheave wear.

1. Shaft alignment can be checked by measuring the distance between the shafts at 3 or more locations. If the distances are equal, then the shafts will be parallel.

2. Check alignment of sheaves:
   Fixed sheaves — To check the location of the fixed sheaves on the shafts, a straightedge or a piece of string can be used. If the sheaves are properly lined up the string will touch them at the points indicated by the arrows in Fig. 25.
   Adjustable sheave — To check the location of adjustable sheave on shaft, make sure that the centerlines of both sheaves are in line and parallel with the bearing support channel. See Fig. 24. Adjustable pitch sheaves are installed on the motor shaft.
3. Rotating each sheave a half revolution will determine whether the sheave is wobbly or the drive shaft is bent. Correct any misalignment.
4. With sheaves aligned, tighten cap screws evenly and progressively.
   NOTE: There should be a 1/8-in. to 1/4-in. gap between the mating part hub and the bushing flange. If gap is closed, the bushing is probably the wrong size.
5. With taper-lock bushed hubs, be sure the bushing bolts are tightened evenly to prevent side-to-side pulley wobble. Check by rotating sheaves and rechecking sheave alignment.

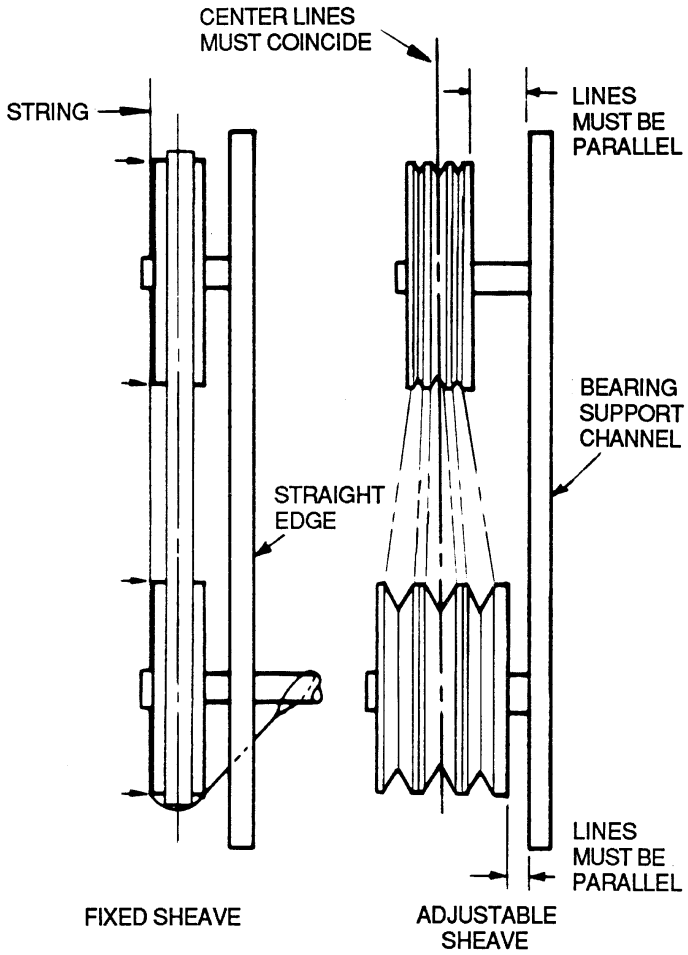

Fig. 24 — Sheave Alignment

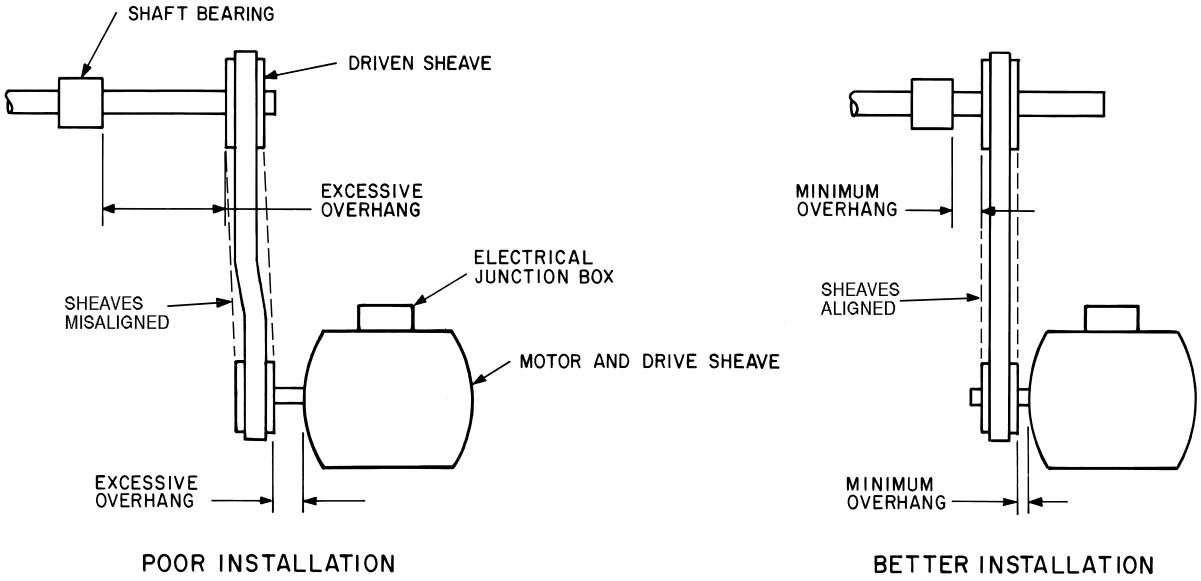

Fig. 25 — Determining Sheave-Shaft Overhang

Install V-Belts — *When installing or replacing belts, always use a complete set of new belts.* Mixing old and new belts will result in the premature wear or breakage of the newer belts.

1. Always adjust the motor position so that V-belts can be installed without stretching over grooves. Forcing belts can result in uneven stretching and a mismatched set of belts.
2. **Do not allow belt to bottom out in sheave.**
3. Tighten belts by turning motor-adjusting jackscrews. Turn each jackscrew an equal number of turns.
4. Equalize belt slack so that it is on the same side of belt for all belts. Failure to do so may result in uneven belt stretching.
5. Tension new drives at the maximum deflection force recommended (Fig. 31).
6. To determine correct belt tension, use the deflection formula given below and the tension data from Fig. 26 as follows:

EXAMPLE:

Given

Belt Span 16 in.
Belt Cross-Section A, Super Belt
Small Sheave Pitch Diameter 5 in.

Solution

1. From Fig. 26 find that deflection force for type A, super belt with 5-in. small sheave pitch diameter is 4 to 51/2 lb.

2. Deflection = 16/64 = 1/4”

3. Increase or decrease belt tension until force required for 1/4-in. deflection is 51/2 lb.

Check belt tension at least twice during first operating day. Readjust as required to maintain belt tension within the recommended range.

With correct belt tension, belts may slip and squeal momentarily on start up. This slippage is normal and disappears after unit reaches operating speed.

WARNING: *Excessive belt tension shortens belt life and may cause bearing and shaft damage.*

After run-in, set belt tension at lowest tension at which belts will not slip during operation.

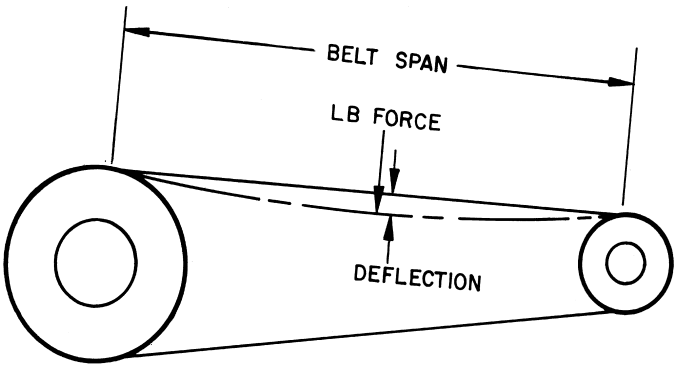

$$\text{Deflection} = \frac{(\text{Belt Span})}{64}$$

BELT CROSS SECTION	SMALL SHEAVE PD RANGE (in.)	DEFLECTION FORCE — LB					
		Super Belts		Notch Belts		Steel Cable Belts	
		Min	Max	Min	Max	Min	Max
A	3.0- 3.6	3	4 1/4	3 7/8	5 1/2	3	4
	3.8- 4.8	3 1/2	5	4 1/2	6 1/4	3 3/4	4 3/4
	5.0- 7.0	4	5 1/2	5	6 7/8	4 1/4	5 1/4
B	3.4- 4.2	4	5 1/2	5 3/4	8	4 1/2	5 1/2
	4.4- 5.6	5 1/8	7 1/8	6 1/2	9 1/8	5 3/4	7 1/4
	5.8- 8.6	6 3/8	8 3/4	7 3/8	10 1/8	7	8 3/4
C	7.0- 9.4	11 1/4	14 3/8	13 3/4	17 7/8	11 1/4	14
	9.6-16.0	14 1/8	18 1/2	15 1/4	20 1/4	14 1/4	17 3/4
3V	2.65-3.65	3 1/2	5	3 7/8	5 1/2	—	—
	4.12-6.90	4 3/4	6 7/8	5 1/4	7 7/8	—	—
5V	4.40-6.70	—	—	10	15	—	—
	7.1-10.9	10 1/2	15 3/4	12 7/8	18 3/4	—	—
	11.8-16.0	13	19 1/2	15	22	—	—
8V	12.5-17.0	27	40 1/2	—	—	—	—
	18.0-22.4	30	45	—	—	—	—

PD — Pitch Diameter, inches

Fig. 26 — Fan Belt Tension Data

Steam Coil Piping Recommendations

GENERAL — Use straps around the coil casing to lift and place the coil.

CAUTION

To prevent damage to the coil or coil headers: **Do not use the headers to lift the coil.** Support the piping and coil connections independently. Do not use the coil connections to support piping. When tightening coil connections, use a backup wrench on the coil connection stub-out.

NOTE: Piping should be installed by a qualified installer familiar with the type of piping to be installed. Perform piping to industry best practices.

STEAM COILS — Position the steam supply connection at the top of the coil, and the return (condensate) connection at the bottom.

Figure 27 illustrates the normal piping components and the suggested locations for high, medium, or low-pressure steam coils. The low-pressure application (zero to 15 psig) can dispense with the ¼-in. petcock for continuous venting located above the vacuum breaker (check valve).

Note the horizontal location of the 15-degree check valve, and the orientation of the gate/pivot. This valve is intended to relieve any vacuum forming in the condensate outlet of a condensing steam coil, and to seal this port when steam pressure is again supplied to the coil. It must not be installed in any other position, and should not be used in the supply line.

For coils used in tempering service, or to preheat outside air, install an immersion thermostat in the condensate line ahead of the trap. This will shut down the supply fan and close the outdoor damper whenever the condensate falls to a predetermined point, perhaps 120 F.

NOTE: DO NOT use an immersion thermostat to override a duct thermostat and open the steam supply valve. For vacuum return systems, the vacuum breaking check valve would be piped into the condensate line between the trap and the gate valve instead of open to the atmosphere.

Figure 28 illustrates the typical piping at the end of every steam supply main. Omitting this causes many field problems and failed coils.

Figure 29 shows the typical field piping of multiple coils. Use this only if the coils are the same size and have the same pressure drop. If this is not the case, an individual trap must be provided for each coil.

Figure 30 shows a multiple coil arrangement applied to a gravity return, including the open air relief to the atmosphere, which DOES NOT replace the vacuum breakers.

Figure 31 illustrates the basic condensate lift piping.

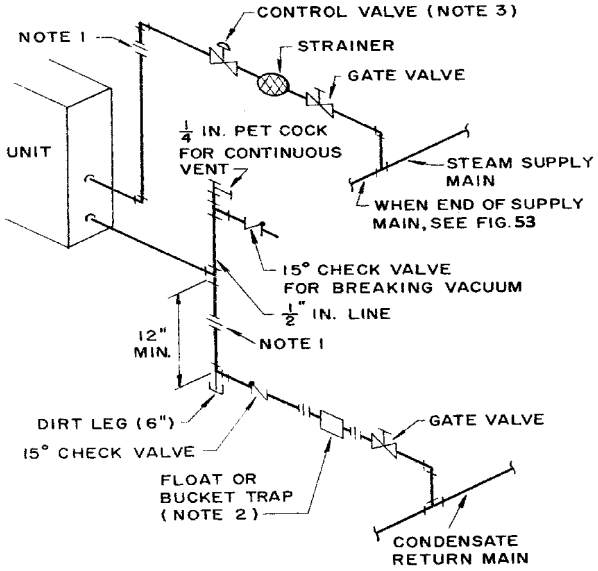

Fig. 27 — Low, Medium or High Pressure Coil Piping

NOTES:

1. Flange or union is located to facilitate coil removal.
2. Flash trap may be used if pressure differential between steam and condensate return exceeds 5 psi.
3. Dirt leg may be replaced with a strainer. If so, tee on drop can be replaced by a reducing ell.
4. The petcock is not necessary with a bucket trap or any trap which has provision for passing air. The great majority of high or medium pressure returns end in hot wells or deaerators which vent the air.

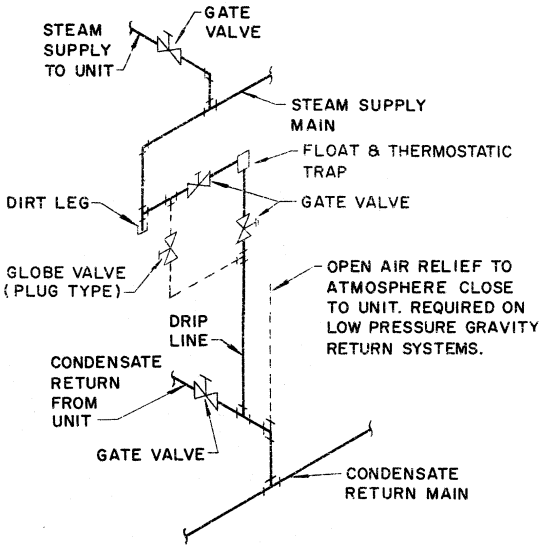

Fig. 28 — End of Steam Supply Main Piping Detail

NOTES (Figure 28):

1. A bypass is necessary around trap and valves when uninterrupted operation is necessary.
2. Bypass to be the same size as trap orifice but never less than 1/2 inch.

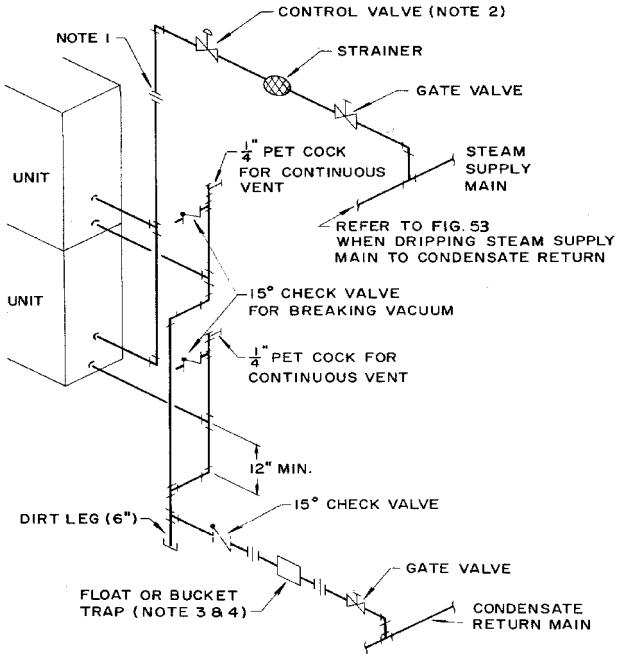

Fig. 29 — Multiple Coil High Pressure Piping

NOTES:

1. Flange or union is located to facilitate coil removal.
2. When a bypass with control is required.
3. Flash trap can be used if pressure differential between supply and condensate return exceeds 5 psi.
4. *Coils with different pressure drops require individual traps. This is often caused by varying air velocities across the coil bank.*
5. Dirt leg may be replaced with a strainer. If so, tee on drop can be replaced by a reducing ell.
6. The petcock is not necessary with a bucket trap or any trap which has provision for passing air. The great majority of high pressure return mains terminate in hot wells or deaerators which vent the air.

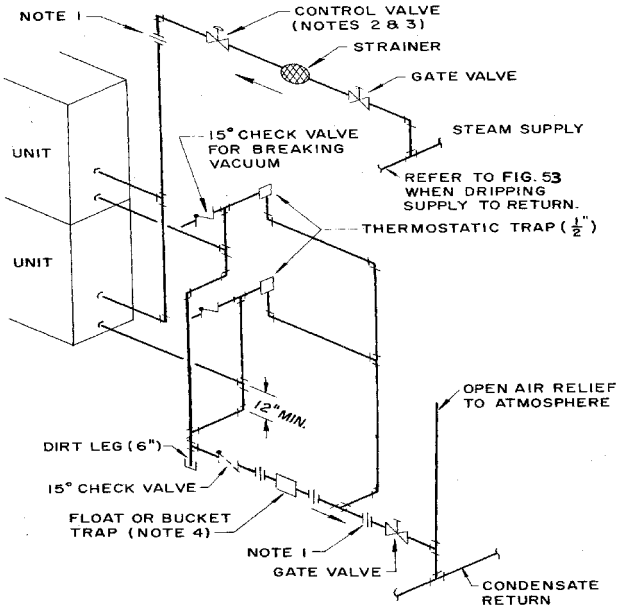

Fig. 30 — Multiple Coil Low Pressure Piping Gravity Return

NOTES:

1. Flange or union is located to facilitate coil removal.
2. When control valve is omitted on multiple coils in parallel air flow.
3. When a bypass with control is required.
4. *Coils with different pressure drops require individual traps. This is often caused by varying air velocities across the coil bank.*

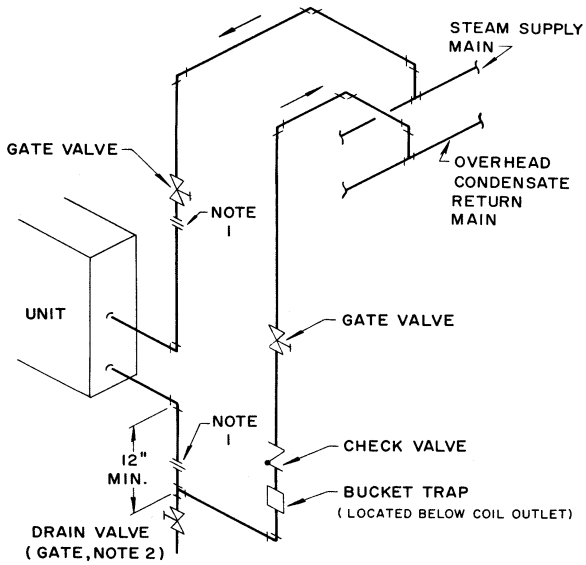

Fig. 31 — Multiple Coil Low Pressure Piping Gravity Return

NOTES:

1. Flange or union is located to facilitate coil removal.
2. To avoid water hammer, drain coil before admitting steam.
3. Do not exceed one foot of lift between trap discharge and return main for each pound of pressure differential.
4. *Do not use this arrangement for units handling outside air.*

Following the piping diagrams in Fig. 26-31, make all connections while observing the following precautions:

• Install a drip line and trap on the pressure side of the inlet control valve. Connect the drip line to the return line downstream of the return line trap.

• To prevent scale or foreign matter from entering the control valve and coil, install a 3/32-in. mesh strainer in the steam supply line upstream from the control valve.

• Provide air vents for the coils to eliminate noncondensable gases.

• Select a control valve according to the steam load, not he coils supply connection size. Do not use an oversized control valve.

• Do not use bushings that reduce the size of the header return connection. The return connection should be the same size as the return line and reduced only at the downstream trap.

• To lift condensate above the coil return line into overhead steam mains, or pressurized mains, install a pump and receiver between the condensate trap and the pressurized main. Do not try to lift condensate with modulating or on-and-off steam control valves. Use only
15-degree check valves, as they open with a lower water head. Do not use 45-degree or vertical-lift check valves.

• Use float and thermostatic traps. Select the trap size according to the pressure difference between the steam supply main and the return main.

• Load variations can be caused by uneven inlet air distribution or temperature stratification.

• Drain condensate out of coils completely at the end of the heating season to prevent the formation of acid.

Coil Freeze-Up Protection

STEAM COILS — When used for preheating outdoor air in pressure or vacuum systems, an immersion thermostat to control outdoor-air damper and fan motor is recommended. This control is actuated when steam supply fails or condensate temperature drops below an established level, such as 120 to 150 F. A vacuum breaker should also be used to equalize coil pressure with the atmosphere when steam supply throttles close. Steam should not be modulated when outdoor air is below 40 F.

On low-pressure and vacuum steam-heating systems, the thermostat may be replaced by a condensate drain with a thermal element. This element opens and drains the coil when condensate temperature drops below 165 F. Note that condensate drains are limited to 5 psig pressure.

INNER DISTRIBUTING TUBE STEAM COILS — The inner distributing tube (IDT) steam coil used in the HB air handling units has an inner tube pierced to facilitate the distribution of the steam along the tube's length. The outer tubes are expanded into plate fins. The completed assembly includes the supply and condensate header and side casings which are built to slant the fin/tube bundle back toward the condensate header. The slanting of the assembly ensures that condensate will flow toward the drains. This condensate must be removed through the return piping to prevent premature failure of the coil. The fin/tube bundle is slanted vertically for horizontal airflow coils, and horizontally for vertical airflow coils.

IDT Steam Coil Piping — The following piping guidelines will contribute to efficient coil operation and long coil life:

1. Use full size coil outlets and return piping to the steam trap. Do not bush return outlet to the coil. Run full size to the trap, reduce at the trap.
2. Use float and thermostatic (F & T) traps only for condensate removal. Trap size selection should be based on the difference in pressure between the steam supply main and the condensate return main. It is good practice to select a trap with 3 times the condensate rating of the coil to which it is connected.
3. Use thermostatic traps for venting only.
4. Use only 1/2-in., 15-degree swing check valves installed horizontally, piped open to atmosphere, and located at least 12 in. above the condensate outlet. Do not use 45-degree, vertical lift and ring check valves.
5. The supply valve must be sized for the maximum anticipated steam load.
6. Do not drip steam mains into coil sections. Drip them on the pressure side of the control valve and trap them into the return main beyond the trap for the coil.
7. Do not use a single trap for two or more coils installed in series. Where two or more coils are installed in a single bank, in parallel, the use of a single trap is permissible, but only if the load on each coil is equal. Where loads in the same coil bank vary, best practice is to use a separate trap for each coil. Variation in load on different coils in the same bank may be caused by several factors. Two of the most common are uneven airflow distribution across the coil and stratification of inlet air across the coil.
8. Do not try to lift condensate above the coil return into an overhead main, or drain into a main under pressure with a modulating or on/off steam control valves. A pump and receiver should be installed between the coil condensate traps and overhead mains and return mains under pressure.
9. Use a strainer (3/32-in. mesh) on the steam supply side, as shown in the piping diagrams, to avoid collection of scale or other foreign matter in the inner tube distributing orifices.

NOTE: IDT coils must be installed with the tubes draining toward the header end of the coil. The IDT steam coils are pitched toward the header end as installed in the unit.

10. Ensure the AHU (air-handling unit) is installed level to maintain the inherent slope. Also ensure the unit is installed high enough to allow the piping to be installed correctly, especially the traps which require long drip legs.
11. Do not fail to provide all coils with the proper air vents to eliminate noncondensable gasses.
12. Do not support steam piping from the coil units. Both mains and coil sections should be supported separately.

IDT Steam Coil Installation — Refer to drawings to position the coils properly with regard to the location of the supply and return connections. Ensure that the IDT coil is pitched with the tubes draining toward the header. The AHUs provide proper coil pitch when the AHU is installed level. Refer to schematic piping diagrams and piping connection notes for the recommended piping methods.

SUCTION PIPING — Connect suction piping as shown in Fig. 32 for face split coil.

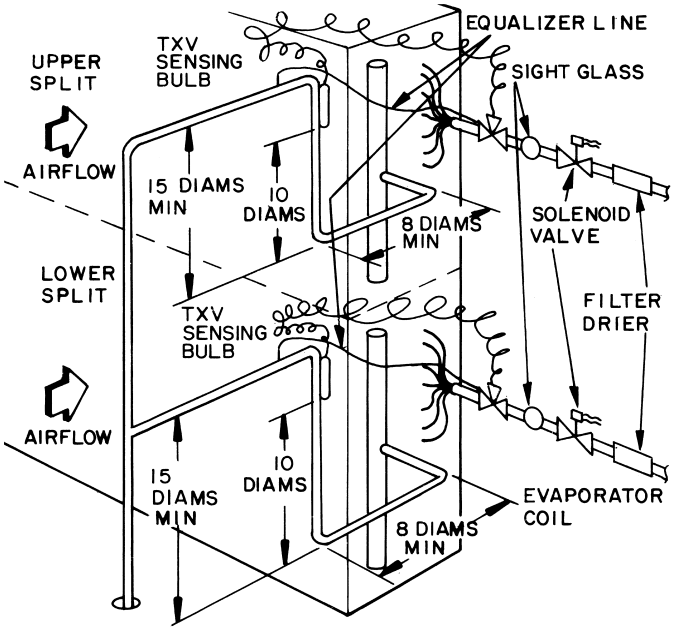

Fig. 32 — Face Split Coil Suction Line Piping
(TXV — Thermostatic Expansion Valve)

Refrigerant Piping, Direct-Expansion (DX) Coils —

Direct-expansion coils are divided into 1 or 2 splits depending upon the unit size and coil circuiting. Each split requires its own distributor nozzle, expansion valve, and suction piping. Suction connections are on the air entering side when the coil is properly installed. Matching distributor connections for each coil split are on the air leaving side. See unit label or certified drawing to assure connection to matching suction and liquid connections.

The lower split of face split coils should be *first on, last off.*

Row split coils utilize special intertwined circuits; either split of these row split coils can be *first on, last off*.

CAUTION

Direct-expansion coils are shipped pressurized with dry nitrogen. Release pressure from each coil split through valves in protective caps before removing caps.

Do not leave piping open to the atmosphere unnecessarily. Water and water vapor are detrimental to the refrigerant system. Until the piping is complete, recap the system and charge with nitrogen at the end of each workday. Clean all piping connections before soldering joints.

Failure to follow these procedures could result in personal injury or equipment damage.

Suction line from coil connection to end of the 15-diameter-long riser should be same tube size as coil connection to ensure proper refrigerant velocity.

Size remaining suction line to compressor for a pressure drop equivalent to 2.0 F. This will provide a total suction line header pressure drop equivalent to approximately 2.5 F. Refer to Fig. 33 for piping risers to the compressor.

To minimize the possibility of flooded starts and compressor damage during prolonged light load operation, install an accumulator in the suction line or a solenoid in the liquid line of last-on, first off split in row-split applications.

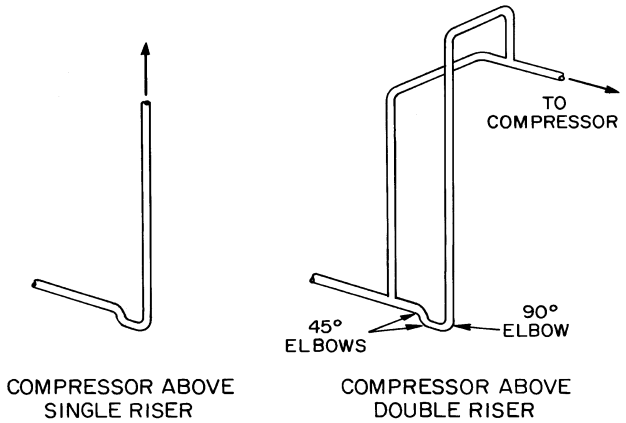

Fig. 33 — Suction Line Riser Piping

EXPANSION VALVE PIPING — Distributor nozzles and expansion valves sized for acceptable performance for a range of conditions are factory supplied. Use the AHU (air-handling unit) selection program in the electronic catalog to select optimal nozzle sizes.
Circuiting selection should result in a circuit loading of 0.8 to 2.0 tons per circuit at design load. Circuit loading must be evaluated at minimum load to ensure that it does not drop below 0.6 tons per circuit. Solenoid valves may be used, if necessary, to shut off the refrigerant supply to individual expansion valves to maintain adequate coil circuit loading.
Compressor minimum unloading and TXV quantity is necessary to determine minimum tonnage per circuit.
Minimum Unloading Equation:

$$\frac{\text{(Tons per Circuit) x (Minimum Unloading) x (Total no. of TXVs}}{\text{no. of TXVs Active}}$$

Example:

Condensing Unit:	38ARS012
Minimum Unloading:	33%
Coil:	6 row, 11 FPI, Half Circuit
Coil Tons per Circuit:	1.68
Total TXVs:	2

In the first example we will determine the tons per circuit when both TXVs are active and the compressor is unloaded to its minimum of 33%

$$= \frac{\text{(1.68 Tons per Circuit) x (33\% Minimum Unloading) x (2 TXVs)}}{\text{2 TXVs Active}}$$

$$= \frac{(1.68) \times (.33) \times (2)}{2}$$

= .55 tons per circuit at minimum unloading UNACCEPTABLE

If we install a liquid line solenoid valve before one of the TXVs and close it so that only one TXV is active when the compressor is unloaded to its minimum of 33%, we see the following:

$$= \frac{\text{(1.68 Tons per Circuit) x (33\% Minimum Unloading) x (2 TXVs)}}{\text{1 TXV Active}}$$

$$= \frac{(1.68) \times (.33) \times (2)}{1}$$

= 1.10 tons per circuit at minimum unloading ACCEPTABLE

There are three different options to control tons per circuit when using an unloading compressor. The first is to use drop solenoid valve control as illustrated above and let the suction cutoff unloaders “ride” with the load. The second is to use drop solenoid valve control as illustrated above with electric unloaders and let the control algorithm determine the combination of solenoid valves and unloaders to limit tons per circuit to acceptable limits. The third is to limit the minimum amount of unloading so that tons per circuit is within acceptable limits.
TXV SENSING BULB—sensing bulb for TXV is shipped coiled up inside cabinet. Remove coil connection panel, route sensing bulb out through suction line hole in panel, reinstall panel. Locate sensing bulb on horizontal section of suction line , and attach to tubing using copper plated strap. Attach sensing bulb between but no lower than the 4-o’clock and 8-o’clock positions. Make sure that there is good contact between the bulb cylinder and tubing. INSULATE the sensing bulb to insure that it reads the temperature of the suction line. For dual-circuit DX coils, make sure to locate the sensing bulb on the correct suction line.

Electric Heaters — Electric heaters may be factory installed or factory-supplied for field installation. Refer to AEH (auxiliary electric heat) accessory installation instructions.

WARNING!

To avoid possible injury or death due to electrical shock, open the power supply disconnect switch and secure it in an open position during installation.

All field-installed wiring, including the electrical ground, MUST comply with the National Electrical Code (NEC) as well as applicable local codes. In addition, all field wiring must conform to the Class II temperature limitations described in the NEC.
Refer to INSTALLATION-ELECTRICAL and following for optional factory-installed motor start/stop station wiring diagrams.

CAUTION

Use only copper conductors for field-installed electrical wiring. Unit terminals are not designed to accept other types of conductors.

START-UP

Pre-Startup

Building Envelope—All building windows and doors should be installed and closed before starting unit. During summer construction, avoid unit sweating by allowing for gradual pull down: use elevated chilled water temperature, reduce chilled water flow rate (gpm), use maximum available airflow.

Heating Fluid Temperature-Maximum entering water temperature is 180°F, unless nameplate indicates 200°F.

CAUTION: If unit is marked for 200°F maximum entering water temperature, customer must ensure that water vaporization does not occur especially at higher elevations when entering water temperatures are greater than 190°F.

Temperature Controls-Check that unit or wall-mounted thermostat or field-supplied controller s connected to the unit.

Outside Air and Freeze Protection-

WARNING: Insure that the unit is protected against freezing conditions Failure to provide freeze protection may result in equipment or property damage. Freeze protection measures are customer-provided and installed and include but are not limited to low-limit thermostats, automatic temperature controls, and use of glycol based heat transfer fluids (see section FREEZE PROTECTION OF WATER PIPING).

1. If "locking quadrant" manual damper operator provided, set to desired position.
2. If damper actuator provided, insure that actuator opens the damper when the fan turns on, and closes when fan stops. Test mixing box controls to make sure OA damper closes on power failure or upon activation of customer-supplied and installed low limit thermostat or other freeze protection device.

Start-Up Check List — Make a walkway inside unit components to protect insulation. Remove all construction debris from unit interior. *Remove walkway before starting unit.*

FILTERS — Install unit filters in all filter sections. Protect open filters from drywall dust and construction debris.

FANS

1. Check lubrication of fan, motor bearings, and linkages.
   a) Note that bearings are permanently lubricated and do not require greasing before startup.
   b) Hand-operate all damper linkages to check for freedom of movement.
2. Check tightness of bearing setscrews or locking collars. Also, check tightness of setscrews on fan wheels and sheaves.
3. Check tightness of fan shaft bearing mounting.
4. Recheck sheave alignment and belt tension. (Refer to Fig. 24 to 26)
5. Hand turn fan to make certain it turns freely and fan wheel does not rub in housing.
6. Check fan speed with a strobe-type tachometer or use the following formula: Obtain the motor rpm from the fan motor nameplate and read sheave pitch diameters marked on the fan and motor pulleys, or estimate the pitch diameters by using the pulley outside diameters.

Then:

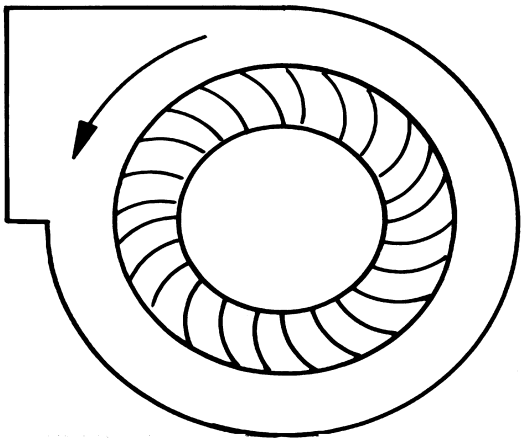

Fig. 34 — Fan Wheel Rotation

Fan Speed (RPM) =	Motor RPM x Motor Sheave Pitch Diameter (in.) / Fan Sheave Pitch Diameter (in.)	
Example:		
	Actual	Approximate
Nameplate Motor RPM	1760	1760
Mtr Sheave Pitch Diameter	8.9 in.	9.0 in. (OD)
Fan Sheave Pitch Diameter	12.4 in.	12.5 in. (OD)
Fan Speed =	1760 x 8.9 / 12.4	1760 x 9 / 12.5
Fan Speed =	1263 RPM	1267 RPM

Refer to the product data catalog for maximum allowable fan speeds for standard wheels. *Excessive fan speed may result in condensate carryover from cooling coil or fan motor overload and wheel failure.*

7. Check direction of rotation (see Fig. 34). Arrow on drive side of fan housing indicates correct direction of rotation.
8. Check vibration. If excessive vibration occurs, check for the following:

a. Variable sheave (if air balance of system has been accomplished: replace sheave with fixed sheave for continuous application).

b. Drive misalignment.
c. Mismatched, worn or loose belts.
d. Wheel or sheaves loose on shaft.
e. Loose bearings.
f. Loose mounting bolts.
g. Motor out of balance.
h. Sheaves eccentric or out of balance.
i. Vibration isolators improperly adjusted.
j. Out-of-balance or corroded wheel (rebalance or replace if necessary).
k. Accumulation of material on wheel (remove excess material).

DANGER

NEVER enter an enclosed fan cabinet or reach into a unit while the fan is running.
LOCK OPEN AND TAG the fan motor power disconnect switch before working on a fan. Take fuses with you and note removal on tag. Electric shock can cause personal injury or death.
LOCK OPEN AND TAG the electric heat coil power disconnect switch before working on or near heaters.
Failure to follow these warnings could lead to personal injury or death.

SERVICE

General

1. Place a suitable walkway to protect floor insulation whenever entering the fan section.
2. Review Safety Considerations at beginning of these instructions. Good safety habits are important tools when performing service procedures.
3. To make speed measurements, use a strobe-style tachometer or calculate per Step 6 of Start-Up, Check List.

Fan Motor Replacement

1. Shut off motor power.
2. Disconnect and tag power wires at motor terminals.
3. Loosen motor brace-to-mounting-rail attaching bolts. Loosen belt tensioning bolts to adjust the motor position so V-belts can be removed without stretching over grooves.
4. Mark belt as to position. Remove and set aside belts.
5. Remove motor to motor bracket hold-down bolts.
6. Remove motor pulley and set aside.
7. Remove motor.
8. Install new motor. Reassemble by reversing Steps 1-6. Be sure to reinstall multiple belts in their original position. Use a complete new set if required. Do not stretch belts over sheaves. Review the sections on motor and sheave installation, sheave alignment and belt tensioning discussed previously (Fig. 29-31).
9. Reconnect motor leads and restore power. Check fan for proper rotation as described in Start-Up, Check List.

Coil Cleaning

DETERGENT — Spray mild detergent solution on coils with garden-type sprayer. Rinse with fresh water. Check to ensure condensate line is free. Excess water from cleaning may flood unit if condensate line is plugged.

Winter Shutdown (Chilled Water Coil Only)

ANTIFREEZE METHODS OF COIL PROTECTION

1. Close coil water supply and return valves.
2. Drain coil as follows:
   Method I — 'Break' flange of coupling at each header location. Separate flange or coupling connection to facilitate coil draining.
   Method II — Open both valves to auxiliary drain piping.
3. After coil is drained:

Method I — Connect line with a service valve and union from upper connection to an antifreeze reservoir. Connect a self-priming reversible pump between the low header connection and the reservoir.
Method II — Make connection to auxiliary drain valves.

4. Fill reservoir with any inhibited antifreeze acceptable to code and underwriter authority.
5. Open service valve and circulate solution for 15 minutes; then check its strength.
6. If solution is too weak, add more antifreeze until desired strength is reached, then circulate solution through coil for 15 minutes or until concentration is satisfactory.
7. Remove upper line from reservoir to reversible pump. Drain coil to reservoir and then close service valve.
8. Break union and remove reservoir and its lines.
9. Leave coil flanges or coupling open and auxiliary drain valves open until spring.

AIR DRYING METHOD OF COIL PROTECTION
(Unit and coil must be level for this method.)

1. Close coil water supply and return main valves.
2. Drain coil as described in procedures for Antifreeze Methods of Coil Protection.
3. Connect air supply or air blower to inlet header connection and close its drain connection.
4. Circulate air and check for air dryness by holding mirror in front of open vent in outlet header drain connection. Mirror will fog if water is still present.
5. Allow coil to stand for a few minutes; repeat Step 4 until coil is dry.

PIPING — Chilled water and hot water coils should always be piped for counterflow. (Fluid should enter the coil at the leaving-air side.) Steam coils must have the condensate connection at bottom of coil.

COIL CLEANING—To determine intervals for cleaning coils in contaminated air operations, pressure taps should be installed across the coils and checked periodically. Abnormal air pressure drop will indicate a need for cleaning the coils.

Steam Systems

Annual steam system maintenance should include:

1. Clean the line strainers.
2. Blow down the dirt leg.
3. Clean and check operation of steam traps.
4. Check operation of control valves.
5. Check the operation of check valves to prevent condensate flowback.
6. Check operation of thermostatic air vents, if used. A float and thermostatic trap will contain a thermostatic air vent. When the bellows is ruptured, it will fail closed.
7. Check operation of vacuum breakers.
8. Check operation of the thermal protection devices used for freeze-up protection.
9. Steam or condensate should not be allowed to remain in the coil during the off season. This will prevent the formation and build up of acids.

There are additional precautions and control strategies, as found in various catalogues and in the ASHRAE Fundamentals Handbook when the entering-air temperature to the coil falls below 35 F. These conditions occur when IDT coils are used for pre-heat and/or face and bypass applications.

Freeze up protection:

1. Use a strainer in the supply line and the dirt leg ahead of the trap.
2. Use a vacuum breaker in the return.
3. Do not use overhead returns from the coil. A floodback can occur.
4. An immersion thermostat to control outdoor-air dampers and the fan motor is recommended. This control is activated when the steam supply fails or the condensate temperature drops below a predetermined temperature, usually 120 F.
5. On low pressure and vacuum systems, the immersion thermostat may be replaced by a condensate drain with a thermal element. This element opens and drains the coil when the condensate temperature drops below 165 F. Note the thermal condensate drain is limited to 5 psig pressure. At greater coil pressures they will not open.

In spite of the precautions listed above, a coil may still freeze up. An oversize capacity coil, at partial load, with a modulating steam control valve will occasionally freeze. Freezing occurs in the 20 F to 35 F range of entering-air temperatures. A better installation would be an undersize coil, with an on/off control valve with thermostatic control in the outside air, set at 35 F air temperature, installed downstream of the first coil; or setting the minimum steam pressure at 5 psig.

Filters

FILTER SECTIONS — Open or remove filter panel to replace old filter with a new filter. See physical data tables for filter data.

Lubrication

BEARINGS

Fan Bearings — Fan bearings are sealed and permanently lubricated.

Motor Bearings — Motor bearings are sealed and permanently lubricated.

SERVICE-Coil & Drainpan Removal and Reinstallation Procedure

1. Perform procedure on the ground for safety. If working at heights USE EXTREME CAUTION observe all FALL SAFETY considerations. Under all conditions, LOCK OUT all power supplies before performing this procedure.
2. Isolate and drain coil from heating/cooling fluid and/or reclaim refrigerant. Disconnect unit from piping. Remove supply piping to allow access into the coil section from the side. Refer to Service Clearance drawing to determine required clear space.
3. Remove the flat coil stubout panel. Refer to Figure 35 and 36 Note that there is another coil access panel on the opposite side of the unit.

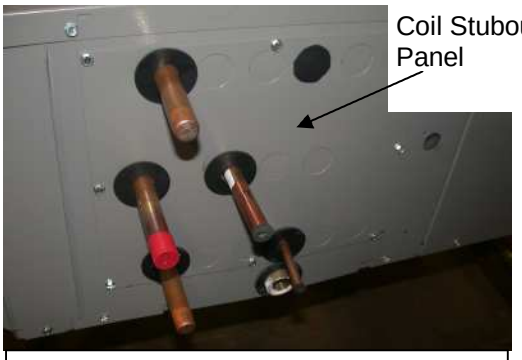

Figure 35

Figure 36
Coil Stubout Panel shown removed

Figure 37
Filter removal

4. Remove filter door and filter (Figure 36 and 37).
5. Remove coil retaining screws (4ea sizes 04-20, up to 6ea sizes 30-80). Screws attach the first coil to the coil panel. Screws are visible from the coil side (Figure 38) and are accessible from the filter side of the unit (Figure 39).

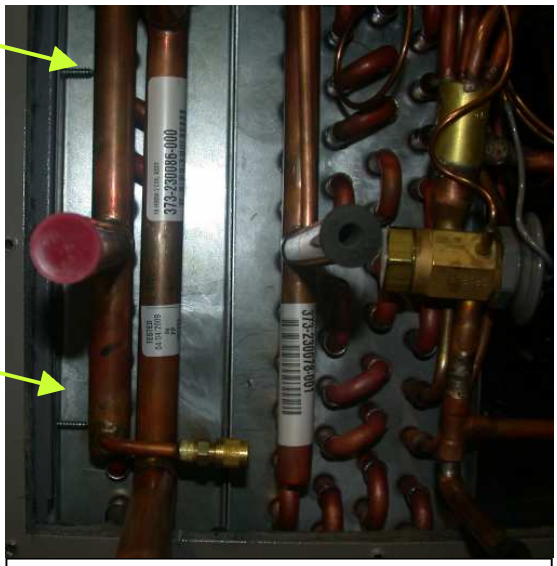

Figure 38
Coil Retaining Screws

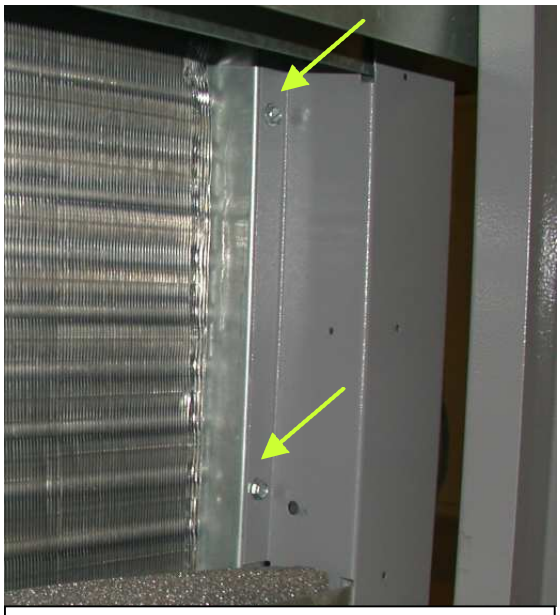

Figure 39
Coil Retaining Screws-filter side view (filter removed)

6. Remove top panel screws at sides and rear (rear leg and coil panel) to allow top to be lifted up. Front screws can remain. Remove top filter rail. (Figure 40 and 41). **WARNING! Insure unit is adequately supported before removing top panel screws!**

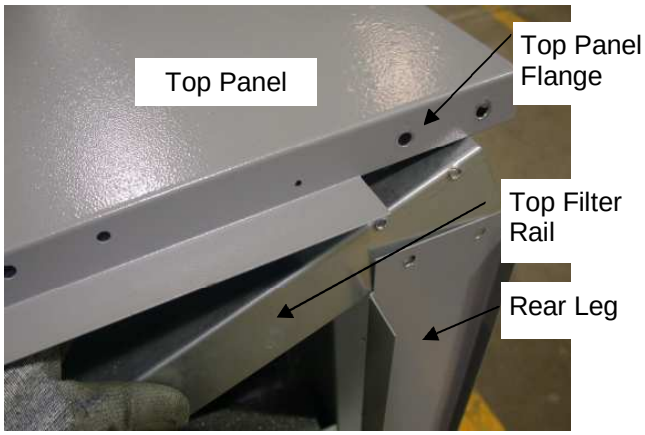

Figure 40

Figure 41

7. Remove screws at bottom of coil panel. Remove coil panel. (Figure 42 and 43)

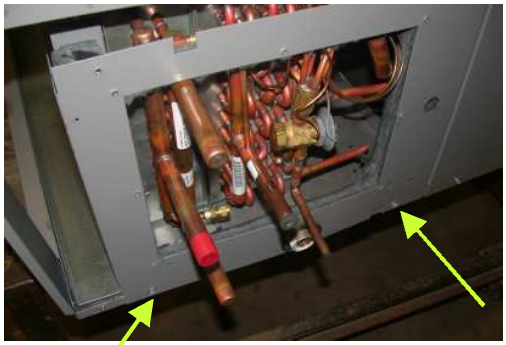

Figure 42

8. Remove coils from unit along with drainpan. Drainpan will slide out of unit (Figure 44 or 45). To remove coils and drainpan, top will need to be lifted up as shown in Figure 40.
9. At this point, the drainpan or one or more coils may be replaced.

Figure 43

Figure 44

Figure 45

10. Follow instructions in reverse to reassemble the unit.

Magic Aire Water Quality Guidelines

For Heat Exchanger Coils with Copper Tubes

Introduction:

Poor cooling/heating water quality can cause serious problems. Ground source or open loop water quality varies and therefore should be tested to determine suitability for use with Magic Aire equipment. Test water for hardness, acidity and iron content before the equipment is installed. Poor water quality can cause one or more of the following problems: mineral deposits, sediment deposits or corrosion. These problems will result in fouling, contamination or damage to water coils and may render them inoperable or inefficient. It is the responsibility of the customer to insure that the water quality meets or exceeds water quality specifications prescribed in Table 1.

Table 1

Condition	Acceptable Level	
pH	7 to 9	
Total Hardness	Calcium and magnesium carbonate should not exceed 20 grains per gallon (350 ppm).	
Iron Oxides	< 1 ppm.	
Iron Bacteria	No level allowable.	
Brackish	Calcium or sodium chloride concentrations ≤ 125 ppm. (Seawater is approximately 25,000 ppm)	
Sediment/Solids	Provide ≤ 800 micron filtration on open loop or ground source systems.	
Corrosion[1]	Ammonia, Ammonium Hydroxide	0.5 ppm max.
	Ammonium Chloride, Ammonium Nitrate	0.5 ppm max.
	Ammonium Sulfate	0.5 ppm max.
	Chlorine/Chlorides	0.5 ppm max.
	Hydrogen Sulfide[2]	None Allowable

NOTES:

1. If the concentration of these corrosives exceeds the maximum allowable level, then the potential for serious corrosion problems exists.

2. Sulfides in the water quickly oxidize when exposed to air, requiring that no agitation occur as the sample is taken. Unless tested immediately at the site, the sample will require stabilization with a few drops of one Molar zinc acetate solution, allowing accurate sulfide determination up to 24 hours after sampling. A low pH and high alkalinity cause system problems, even when both values are within ranges shown. The term pH refers to the acidity, basicity, or neutrality of the water supply. Below 7.0, the water is considered to be acidic. Above 7.0, water is considered to be basic. Neutral water contains a pH of 7.0.

3. To convert ppm to grains per gallon, divide by 17. Hardness in mg/l is equivalent to ppm.