DV SERIES

Generation B

Magic Aire Fan Coil Unit – Sizes 04 through 10

Installation, Operation and Maintenance Manual

The **Magic Aire® Fan Coil Unit** is designed for use in any air distribution system. It is easily adaptable to most types of existing or new forced-air heating systems, or it can be installed in an independent air cooling system.

Pay particular attention to the following words:
NOTE–intended to clarify or make installation easier.
CAUTION–given to prevent equipment damage.
WARNING–to alert installer that personal injury and/or equipment damage may result if installation procedure is not properly followed.

GENERAL

Immediately inspect each unit for damage upon receipt. File any damage claims with the freight carrier. Protect stored units from damage. Do not stack more than two high.

Use these instructions in conjunction with other appropriate instructions, including but not limited to those instructions supplied with the outdoor unit (if applicable). Installation must comply with all applicable local codes.

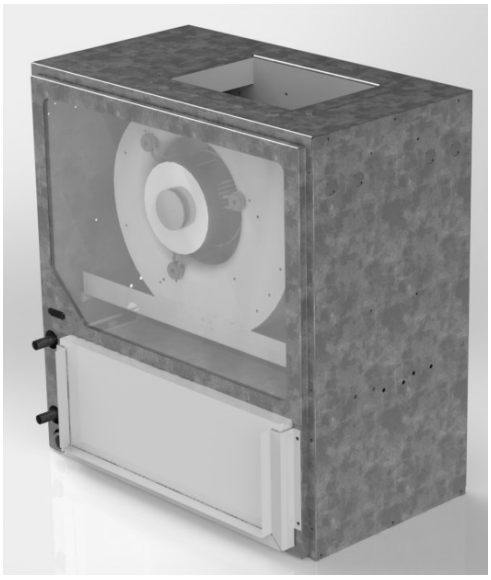

EXISTING DUCT WORK

The previously installed air distribution system for heating requires close inspection to determine its suitability for cooling. In general, heating systems designed for outside temperatures of zero degrees or lower will need no alteration when used for cooling. However, in southern sections of the country, the existing heating duct work may have to be modified to provide better air distribution and insulation for cooling.

DUCT INSULATION AND VAPOR PROOFING

Properly installed heating supply ducts should already have adequate insulation against excessive heat loss. This same insulation should therefore be satisfactory in the summer to protect against heat gain. However, depending on the specific installation, it may be desirable to add to the insulation.

All externally insulated duct work must have an adequate vapor seal for summer operation. This is particularly important where the duct is exposed to highly humid conditions in such places as attic, vented crawl spaces, unconditioned basements, and utility rooms. The vapor seal prevents condensation of moisture in the insulating material and subsequent loss of its insulating value.

NOTE: Consult a qualified insulation contractor to insure your system is properly insulated.

THIS PAGE INTENTIONALLY LEFT BLANK

Installation, Start-Up and Service Instructions

Topic	Page
SAFETY CONSIDERATIONS	1, 5
UNPACKING	1
INSTALLATION	5
Pre-installation	5
Floor Mounting	5
Ductwork	6
Condensate Drain	6
Refrigerant/Chilled Water Piping	6
Freeze Protection	6
Auxiliary Drain Pan	6
Refrigerant Connections, TXV or Orifice	7
Electrical	8-11
DIMENSIONAL DRAWINGS	12-13
STARTUP REPORT	15

THIS PAGE INTENTIONALLY LEFT BLANK

INSTALLATION

1. Remove all packing and foreign material from unit.
2. Check blower wheel for free rotation.
3. Check copper lines, coil etc for internal or hidden damage. Maintain caps and plugs until ready for connection to system.
4. In an attic installation where unit is resting on the attic floor, a suitable isolation pad or other vibration isolation should be provided to minimize equipment sound transmission to the living area.
5. The fan coil requires service clearances as shown in Figures 8 and 9. Units are approved for 0" (zero inches) of clearance. Units are designed for vertical (upflow or downflow) airflow discharge only.
6. Mount unit on accessory legs (leg kit accessory) or field-provided stand. **WARNING! Make sure to allow at least 4.5" below the unit for the condensate drain trap!**
7. Mount Install condensate drain. See section "CONDENSATE DRAIN".
8. Attach discharge and return ductwork. See section "Placing Unit in Ductwork."
9. Connect refrigerant liquid and suction piping to unit (DX coil). **NOTE**: Size and install per condensing unit manufacturer's recommendations.
10. Connect chilled water supply and return piping to unit (Chilled Water coil). **CAUTION**: Protect cabinet and internal piping by wrapping each pipe with a wet cloth while brazing.

WARNING: Disconnect and Lock Out all incoming power sources before connecting to electrical service.

Attach L1 and L2 to motor neutral and speed wire lead leads as shown on wiring diagram on unit front panel. Refer to nameplate for FLA, MCA and MOPD. Units with field installed electric heater accessory may be equipped with fan relay.

The unit should be supported by a suitable floor surface. **Unit is not intended to be suspended from a ceiling or roof deck.**

WARNING: Insure that supporting structure is adequate for the loads being applied. Consult structural design professional if required.

Before installing any unit, the installer must determine that the weight of the unit can be safely supported by the floor joists, rafters, ceiling, etc. Care should be taken to insure that floor stand or other mounting surface is located so as to not block the access doors, interfere with the electrical, mechanical, or drain functions of the units.

SUPPLY AND RETURN DUCTWORK

1. Use flexible duct connectors to supply and return connections to minimize sound transmission from unit to ductwork.
2. When the connecting return air duct is smaller than the coil inlet opening, construct the transition piece so that the vertical and horizontal dimensions of the transition piece do not increase more then one inch for every seven inches of length of the transition piece.
3. For best performance, provide at least three feet of straight duct work preceding the coil inlet.
4. Install unit so that the entering chilled water is on the leaving air side of the coil (Chilled Water coil). Refrigerant coils are supplied in the proper orientation. **NOTE**: If reversed, capacity will be reduced.
5. Install unit so that it pitches slightly –(1/8 inch) – toward the condensate drain opening that is to be used.

CONDENSATE DRAIN

Provide condensate drain piping material and size per local code requirements. Provide P-trap with minimum seal of 4.0 inches. Insure that P-trap is installed below the drain elevation to allow pan to drain fully. Pitch drain piping downward with minimum slope of 1/8" per foot, or minimum required by code. **NOTE: Failure to provide proper condensate drain trap may lead to condensate overflow and property damage and to unacceptable IAQ conditions. Auxiliary drain pan is recommended to prevent property damage in the event of blocked drainage system piping.**

WARNING-AUXILIARY DRAIN PAN RECOMMMENDED: Many municipalities have adopted building codes that require the use of auxiliary drain pans. Magic Aire holds that this practice represents the standard for professional installation whether or not such codes exist in a specific municipality or territory. As such, water damages that would have been prevented had an auxiliary pan been deployed will not be considered for compensation. This position is taken regardless of whether the source of the moisture was specified as a potential failure mode in the applicable building code or not. A freeze burst, cracked drain pan, failed weld, or corrosion induced leak are some of the potential failure modes that are mitigated when an auxiliary pan is properly installed. Professional installers recognize the value of protecting customer assets against foreseeable events. Customers who choose to avoid the cost of common protective measures waive their right to seek damages when those foreseeable events occur. If the Fan-Coil is located above a living space or where damage may result from condensate overflow, install a watertight pan of corrosion-resistant metal beneath the unit to catch over-flow which may result from clogged drains or from other reasons. Provide proper drain piping for this auxiliary pan. Consult local codes for additional precautions before installation.

INSTALLATION OF CHILLED WATER LINES (with Chilled Water Coils)

1. If the Fan Coil Unit is located where the coil is subject to freezing during winter months, protect the coil from freezing. The coil can be protected by:
   A. Use of glycol cooling fluid, and/or
   B. Circulation of warm air over the coil.

   CAUTION: Draining the system may not protect the coil from freezing. However, the system must be drained when glycol has not been added, for minimal protection.

2. Whenever glycol is added for the heating season, the system may have to be flushed prior to the start of the next cooling season because of capacity loss due to glycol.
3. Insulate chilled water piping with good quality insulation material with vapor barrier that is continuous up to the unit casing.

WARNING

FREEZE PROTECTION

Insure that the unit is protected against freezing conditions. Failure to provide freeze protection may result in equipment or property damage. Freeze protection measures are customer-provided and installed and include but are not limited to low-limit thermostats, automatic temperature controls, and use of glycol based heat transfer fluids. See also section "CONDENSATE DRAIN".

Refrigerant coils may form ice ("freezing") under certain non-standard operating conditions. Magic Aire recommends use of a field-provided and installed low limit thermostat on DX coils to prevent damage and adverse operation caused by coil icing.

INSTALLATION OF REFRIGERANT LINES
Size and install refrigerant lines in accordance with the condensing unit manufacturer's instructions.

REFRIGERANT PIPING AT THE UNIT: Install TXV sensing bulb 7 diameters downstream from the manifold on a horizontal section of the suction line in the 3-o'clock or 9-clock position. Insulate the sensing bulb thoroughly so that it receives a good temperature signal from the gas in the suction line. For 7/8" O.D. and larger suction lines, use 4-o'clock or 8-o'clock position. Alternately, the sensing bulb may be located on a descending vertical section of the suction line.

NOTE: Units with coil "less TXV" are shipped with 3/8" Chatleff male refrigerant distributor and with nut and liquid line stubout (3/8" copper tube).

NOTE: On a "less TXV" coil **THERE IS NO PISTON METERING DEVICE PRESENT** except with the R-22 "orifice" option. The customer may size, select and field install a piston to provide metering without a TXV. For best results, use of the factory TXV is recommended. Field installable TXV is available as an accessory.

FIELD INSTALLED TXV—Factory Provided
(Figure 2) Install Factory TXV by threading on to the distributor. **Remove piston (if present) from distributor.** Make sure Teflon gasket (ref Fig. 1) is present and in good condition, at the distributor and on the TXV. Connect equalizer line to schrader valve connection at the coil.

FIELD INSTALLED TXV—Field Provided
Install field-provided TXV outside the unit cabinet in the liquid line. **NOTE: Remove piston (if present) from distributor.** Make sure Teflon gasket (ref Fig. 2) is present and in good condition, at the distributor. Connect equalizer line to schrader valve connection at the coil. Use a schrader depresser fitting or remove the schrader valve body so that the equalizer line reads the suction line pressure. It is also acceptable to braze-in a separate equalizer connection next to the factory connection.

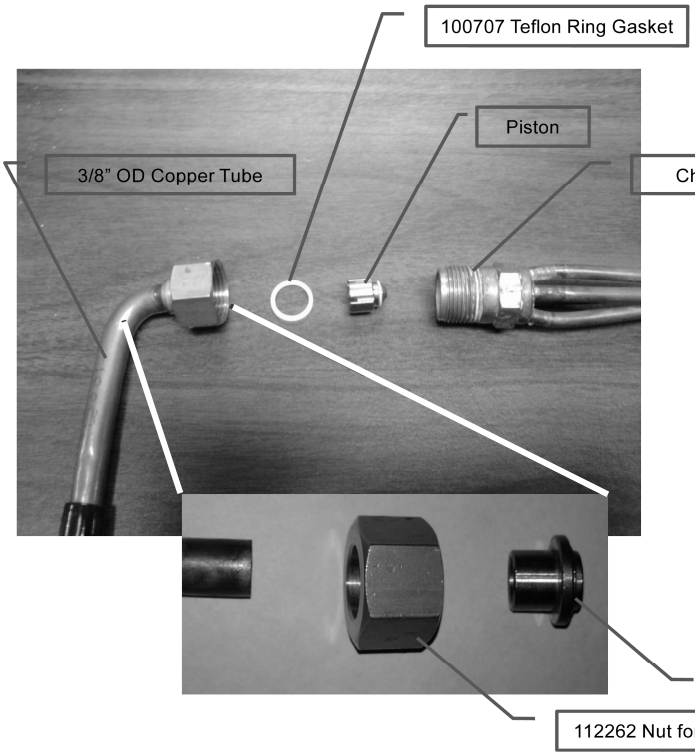

Figure 1
Orifice Metering Option

Figure 2
TXV Installation

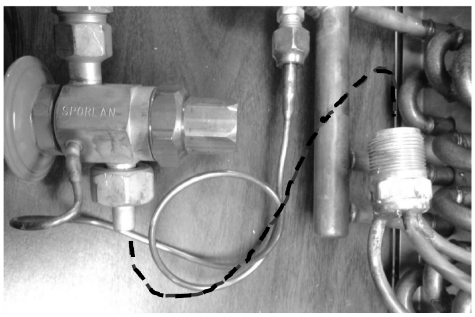

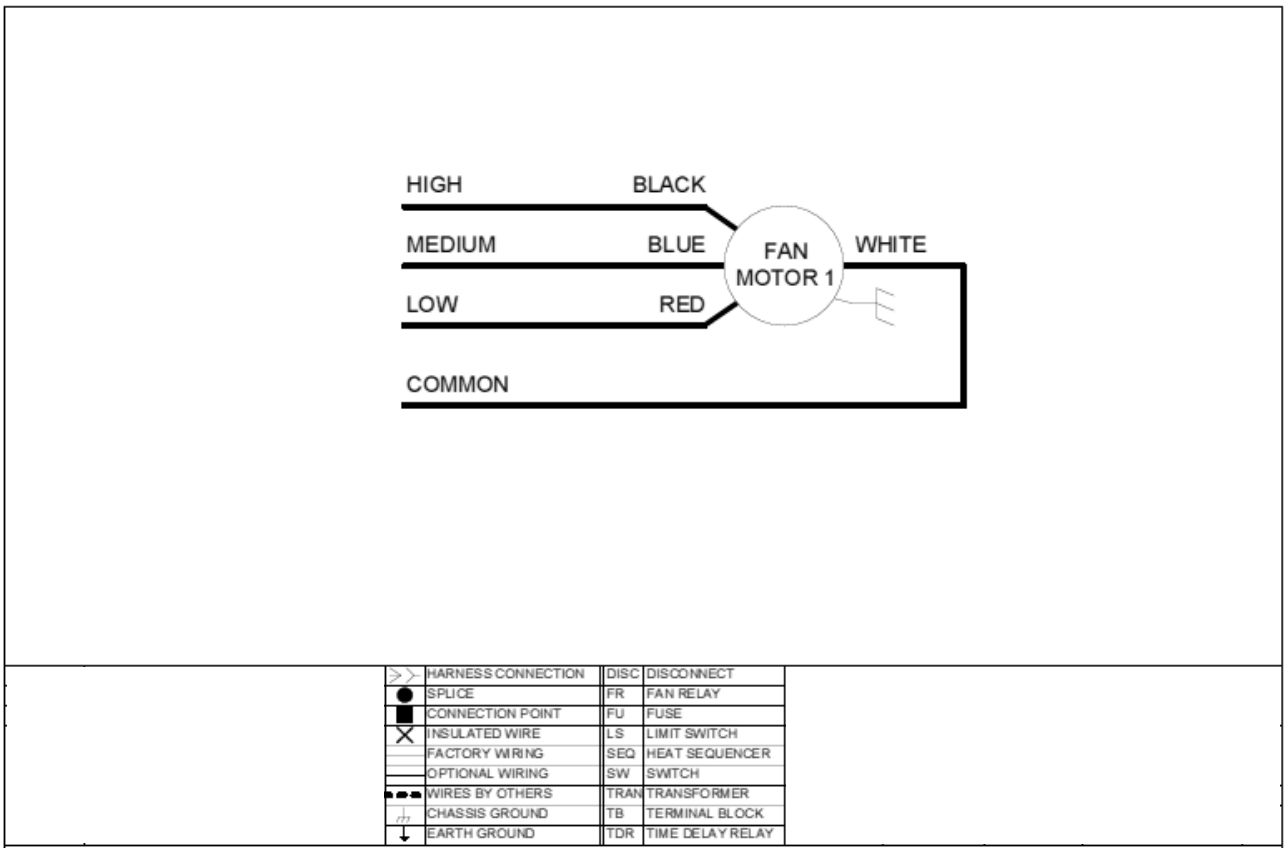

Figure 3
PSC Motor Option
Unit Wiring

ELECTRICAL CONNECTIONS

PSC MOTOR: Figure 3 illustrates the internal wiring for the unit. The utility box is mounted on the coil connection side of the unit. All leads pass through a strain relief where they enter the utility box. Wiring within the cabinet has been positively located and supported so that it does not pass over sharp metal edges or come in contact with moving parts. After servicing, properly position electrical leads in their original supports.

ECM MOTOR: Figure 6 indicates the internal wiring for the unit. The electrically commutated motor (ECM) has 5 discrete speed settings that can be adjusted. The single fan relay allows the thermostat to activate one of the 5 fan speeds. The 24VAC, 40VA control transformer allows the unit to power a thermostat and up to two water flow control valves. See also Figure 8.

WARNING: CHECK MOTOR RATING PLATE FOR CORRECT LINE VOLTAGE.
This appliance must be permanently grounded in accordance with the National Electrical Code and local codes and ordinances.

NOTE: Reference Figures 4 and 5 for access to motor and electrical components.

ELECTRICAL DATA - DVB with PSC MOTOR

Model	Motor				MCA	MOPD
	Voltage	Phase	HP	FLA		
DVB04	115	1	1/10	2.1	2.6	15
	208-230		1/10	0.8	1.0	
	277		1/6	0.9	1.1	
DVB06	115	1	1/6	2.7	3.4	15
	208-230			1.0	1.3	
	277			0.9	1.1	
DVB08	115	1	1/4	4.1	5.1	15
	208-230			1.3	1.6	
	277			2.0	2.5	
DVB10	115	1	1/3	6.9	8.6	15
	208-230			2.2	2.8	
	277			2.4	3.0	

Notes:
1. MCA = Minimum Circuit Ampacity
2. MOPD = Maximum Overcurrent Protective Device, in amps.
3. FLA = Full Load Amps
4. HP = Motor nominal horsepower.
5. All motors are 60Hz.
6. Use minimum wire size #14 AWG 75C wire at unit.

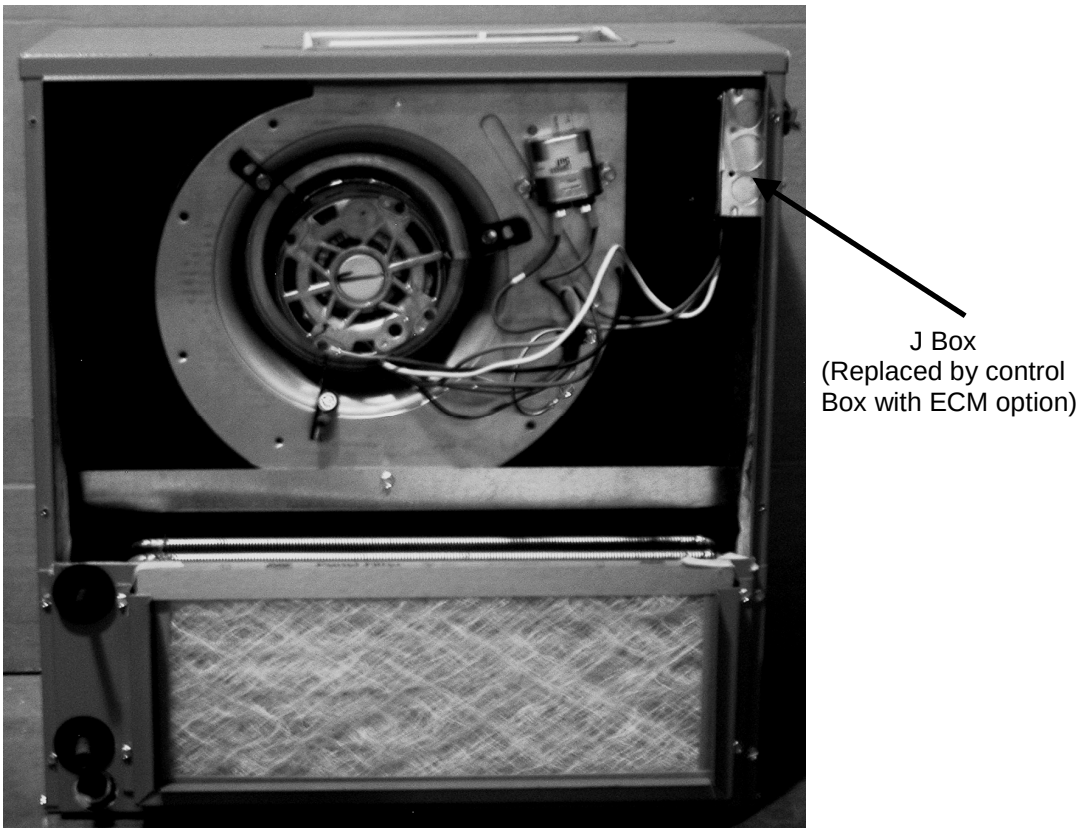

Figure 4
Access Panels Removed
(PSC Motor option shown)

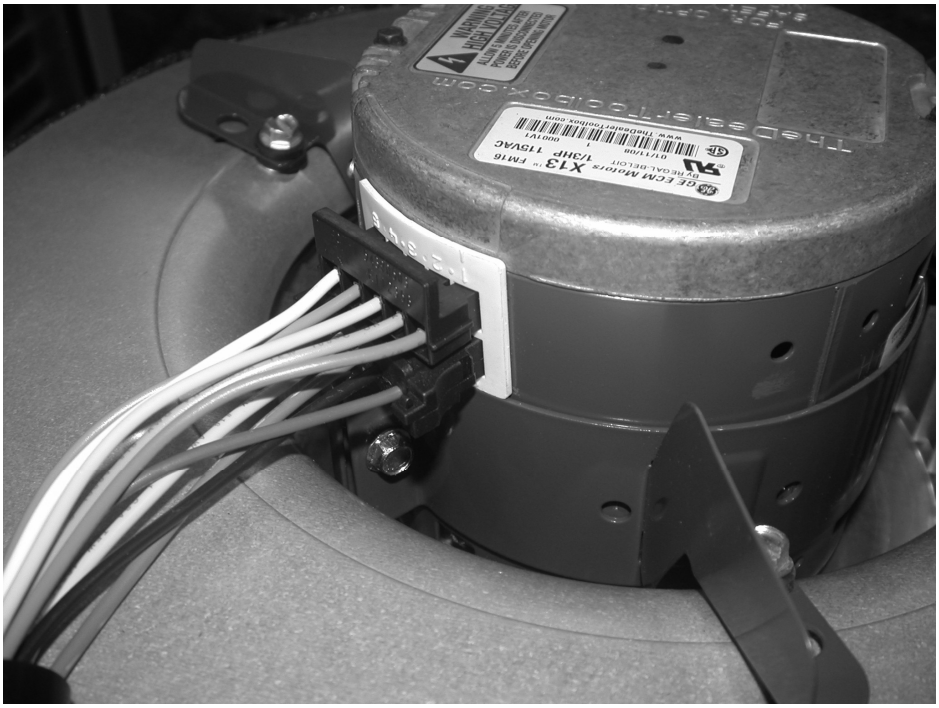

Figure 5
ECM Motor-Connection Detail

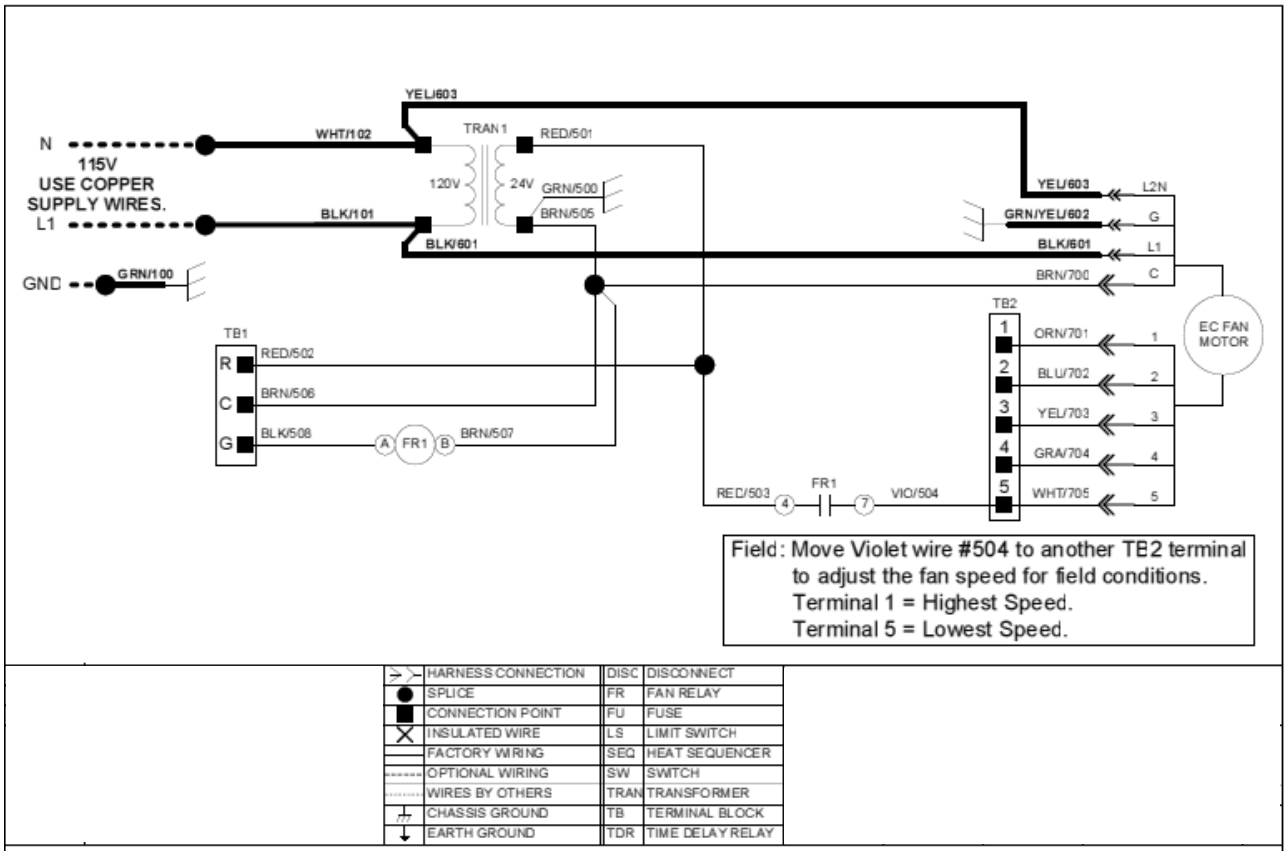

Figure 6
ECM Motor-Unit Wiring

ECM APPLICATION GUIDELINES

DV units with ECM motor have 5 pre-programmed speeds to choose from. Which speed is active is selected using the terminal block.

How it works: Airflow, RPM and static pressure is similar to a PSC motor but more stable and much more efficient.

1. As system static pressure goes up, RPM goes up and CFM goes down.
2. At around 1050rpm, as SP increases, CFM decreases rapidly down to zero at 1200rpm.

How to select the fan speed:

1. Use the airflow tables or New Magic 4 Software to locate the desired operating point.
2. Identify the corresponding tap number from the table.
3. Move Violet wire (504) to the matching connection on terminal block TB2.

How to integrate with 24V thermostat: Connect R, C and G connections on terminal block TB1 to matching connections on thermostat. Energizing the G connection will start the fan.

ECM ELECTRICAL DATA

Unit Size	Coil	Motor hp	Motor FLA	
			115V	208-230V
DVB04	All	1/3	3.2	2.2
DVB06	All	1/3	4.3	3
DVB08	All	1/3	4.3	3
DVB10	All	1/2	6.8	4.1

Notes:

1. Motor is Regal Beloit Endura Pro or equivalent (formerly model “X-13”).
2. Overload Protection: ECM motor is electronically protected.
3. Locked Rotor Amps: If motor speed decreases below a programmed stall speed, the motor will shut down and after a delay period, the control will attempt to restart the motor. Starting current is limited to significantly less than full load current.
4. Agency Listings for the motor: UL File: E100625 Vol. 9 for Motor, Vol. 7 Sect. 14 for Control; CSA File: LR80176

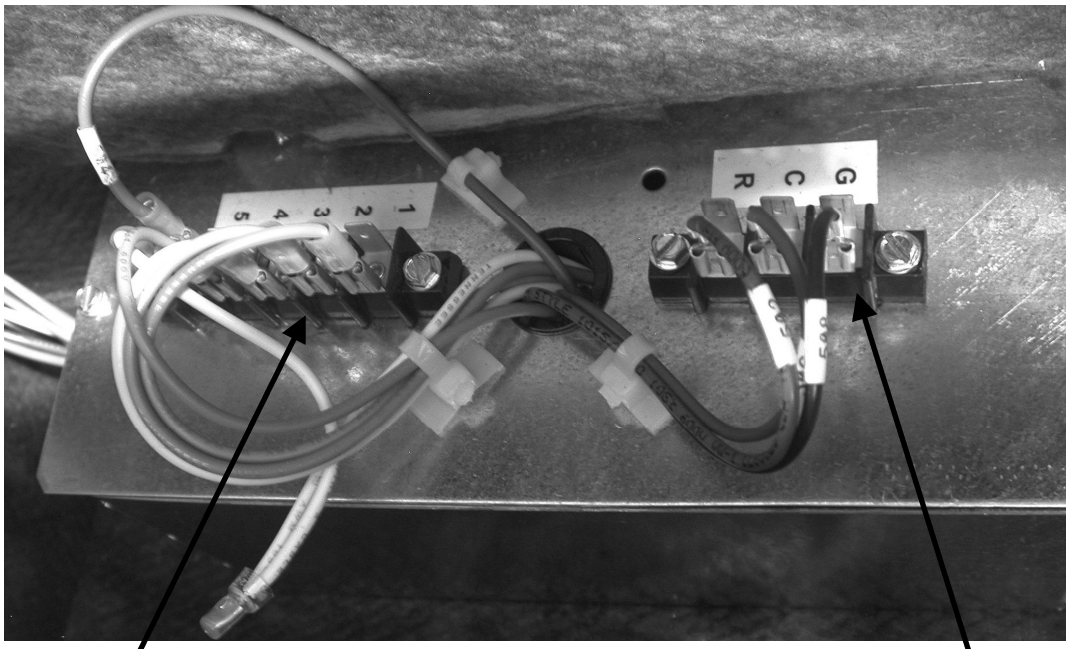

Figure 7
ECM Motor Option-
Control Box Connections

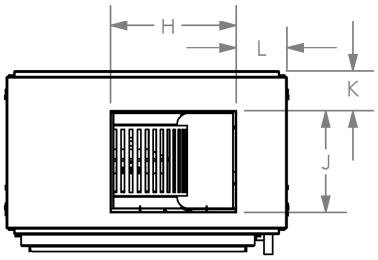

TOP VIEW

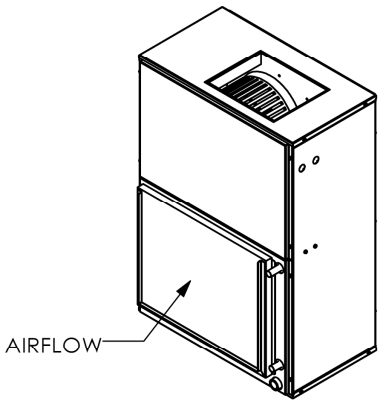

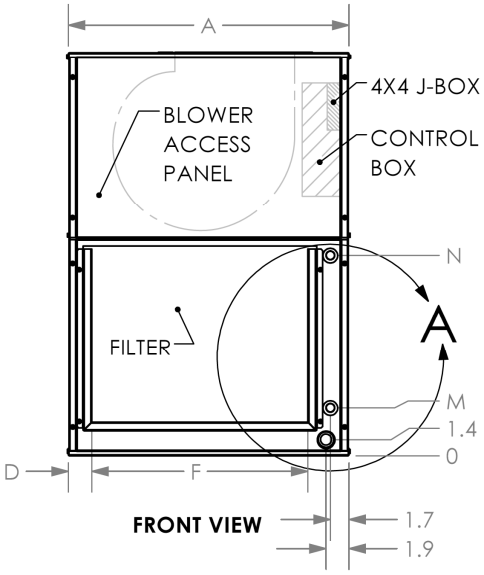

FRONT VIEW

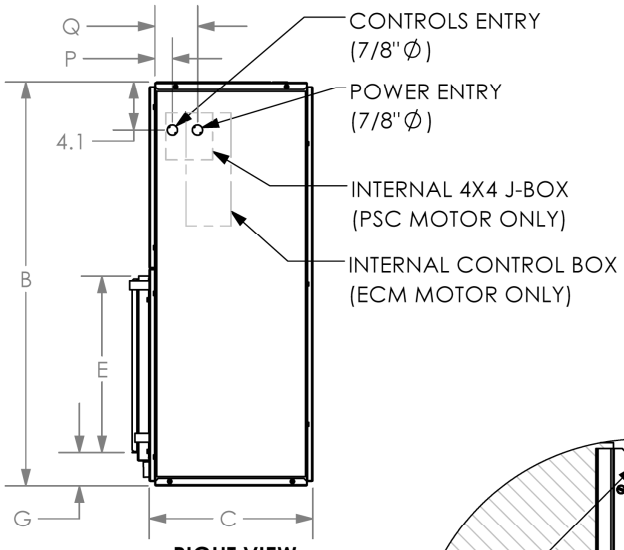

RIGHT VIEW

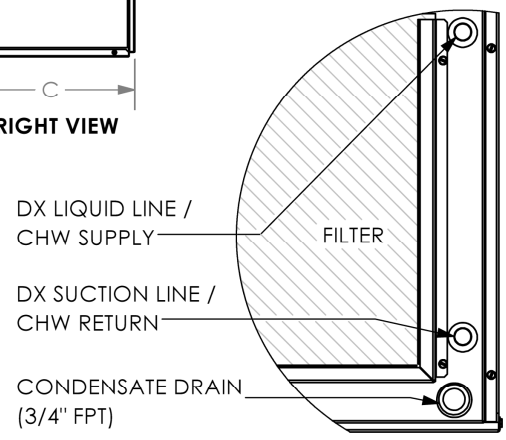

DETAIL A

NOTE:
RIGHT HAND UPFLOW UNIT SHOWN ABOVE. FOR LEFT HAND UNIT, COIL CONNECTIONS MOVE TO LEFT HAND SIDE, MIRRORED ACROSS FRONT VIEW.

ALL UNITS IN INCHES	WIDTH	HEIGHT	DEPTH	RETURN DUCT INLET				BLOWER OUTLET				COIL CONNECTIONS		ELECTRICAL CONNECTIONS	
MODEL	**A**	**B**	**C**	**D**	**E**	**F**	**G**	**H**	**J**	**K**	**L**	**M**	**N**	**P**	**Q**
DVB04	24.0	26.5	14.0	2.0	6.3	18.0	2.8	10.5	7.5	3.4	4.5	4.1	9.1	1.5	3.6
DVB06	24.0	30.5	14.0	2.0	10.3	18.0	2.8	10.5	9.0	3.4	4.5	4.1	13.1	1.5	3.6
DVB08	24.0	34.5	14.0	2.0	14.3	18.0	2.8	10.5	9.0	3.4	4.5	4.1	17.1	1.5	3.6
DVB10	29.0	36.3	15.0	2.0	14.3	23.0	2.8	11.8	9.0	3.2	5.5	4.1	17.1	2.0	4.1

PRODUCT INFORMATION IS SUBJECT TO CHANGE WITHOUT NOTICE

JOB NAME	JOB #	BUYER	BUYER #	LOCATION	DRAWING NO.	REV
					DVB-100	-

DVB-100.SLDDRW

Figure 8
Unit Dimensions
(Upflow)

NOTE:
RIGHT HAND DOWNFLOW UNIT SHOWN BELOW. FOR LEFT HAND UNIT, COIL CONNECTIONS MOVE TO LEFT HAND SIDE, MIRRORED ACROSS FRONT VIEW.

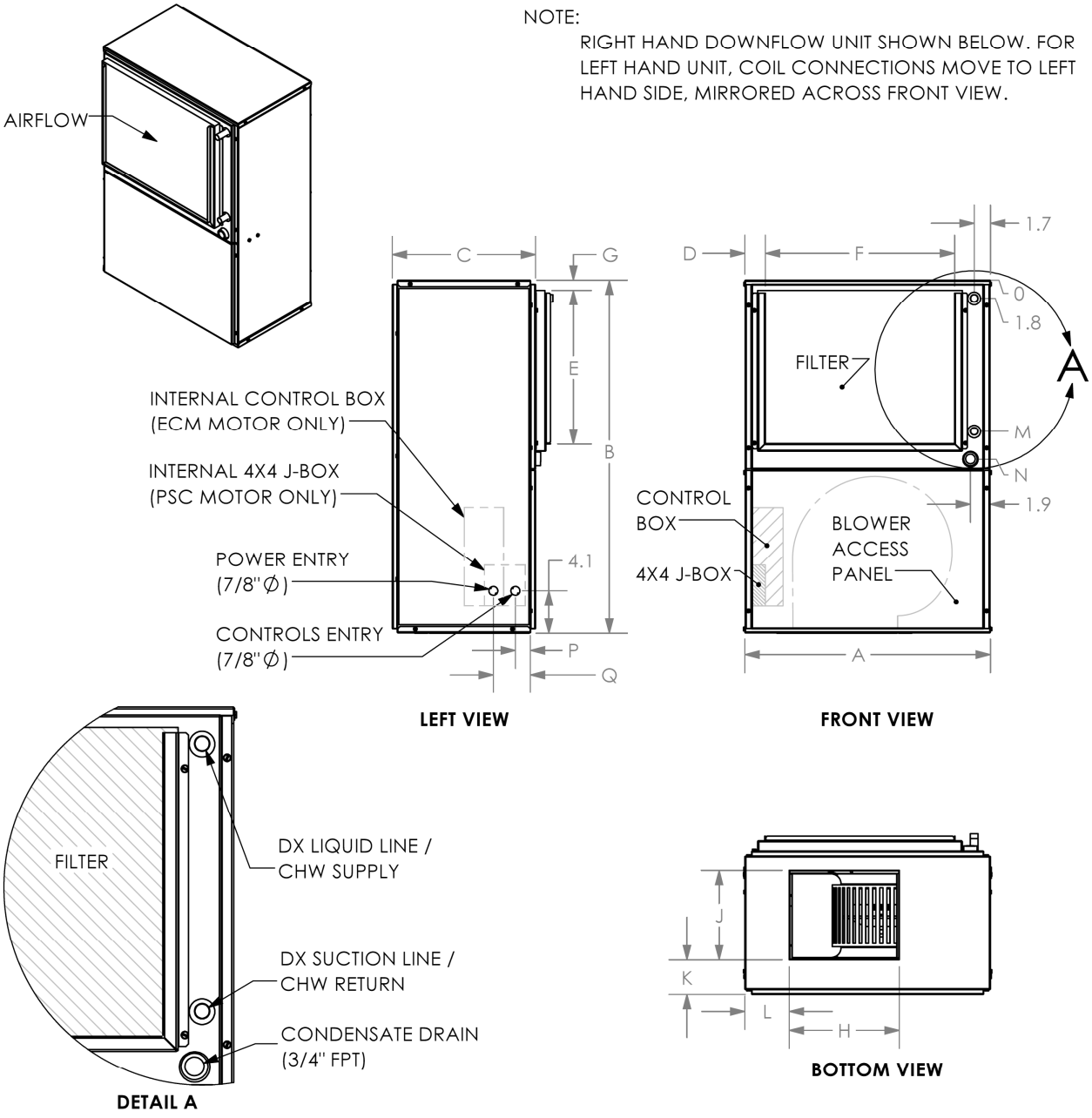

ALL UNITS IN INCHES	WIDTH	HEIGHT	DEPTH	RETURN DUCT INLET				BLOWER OUTLET				COIL CONNECTIONS		ELECTRICAL CONNECTIONS	
MODEL	**A**	**B**	**C**	**D**	**E**	**F**	**G**	**H**	**J**	**K**	**L**	**M**	**N**	**P**	**Q**
DVB04	24.0	26.5	14.0	2.0	6.3	18.0	2.0	10.5	7.5	3.4	4.5	6.8	9.5	1.5	3.6
DVB06	24.0	30.5	14.0	2.0	10.3	18.0	2.0	10.5	9.0	3.4	4.5	10.8	13.5	1.5	3.6
DVB08	24.0	34.5	14.0	2.0	14.3	18.0	2.0	10.5	9.0	3.4	4.5	14.8	17.5	1.5	3.6
DVB10	29.0	36.3	15.0	2.0	14.3	23.0	2.0	11.8	9.0	3.2	5.5	14.8	17.5	2.0	4.1

PRODUCT INFORMATION IS SUBJECT TO CHANGE WITHOUT NOTICE

JOB NAME	JOB #	BUYER	BUYER #	LOCATION	DRAWING NO.	REV
					DVB-101	-

DVB-101.SLDDRW

Figure 9
Unit Dimensions
(Downflow)

THIS PAGE INTENTIONALLY LEFT BLANK

AIR HANDLERS AND FAN COILS

Warranty Registration and Start-up Report

Warranty Registration Form: Complete and submit this form within ten (10) days of start-up to comply with the terms of the Magic Aire warranty. Form must be completed to clearly indicate startup for each unit being registered.

Mail Form(s) to Magic Aire
Warranty Department
501 Galveston St.
Wichita Falls, TX, 76301 or
Email customer.service@MagicAire.com

Job Name		City	
Sales Order #		Unit Tag	
Model Number		Serial Number	
Installer		Quantity of Units	

STARTUP REPORT			
Group	**Checklist Item**	**Yes**	**No**
Electrical/Operational	Does electrical service correspond to unit nameplate?		
	-Nameplate Supply Voltage/Phase	Voltage:	
		Phase:	
	-Nameplate Rated FLA motor current (Amps).	Actual Motor Current:	
	Does all field wiring conform to unit wiring diagram?		
	Is field-provided freeze protection present? (for DX and hydronic coils)		
	Is fan wheel turning the correct direction?		
	Are mixing box dampers operating properly?		
	Is the filter clean?		
Structural	Is unit properly supported?		
	Is unit installed level (necessary for proper condensate drainage)?		
	Is properly sized condensate trap present?		
	Is the condensate disposal system operating correctly?		
	Is auxiliary external condensate drain pan installed as recommended by the installation manual? (not required for valid warranty)		
DX Systems	Is expansion valve bulb properly installed and insulated?		
	Is equalizer line connected to the suction line Schrader valve (or to suction line if field-provided TXV)?		
	Has the DX system been charged with refrigerant according to the condensing unit manufacturer's instructions?		
Piping Check	Is unit piping correct and insulated to prevent condensation?		
	Are the control valve packages piped correctly?		
	Are Valve packages properly insulated?		
	Are there any leaks detected?		
	-in the interior of the unit?		
	-at unit piping connections?		
	-at valve packages or other piping modified in the installation?		

DV Series Air Handling Unit
Installation, Operation and Maintenance Manual

035-000040-001